Western Engineering

Charles T. Hutchinson, Editor and Manager
A. T. Parsons, Assistant Editor
420 Market Street, San Francisco
H. L. QUIGLEY, N. W. Rep., 518 Central Bdg., Seattle. Phone: Elliott 2118.

PUBLISHED MONTHLY BY THE
WESTERN ENGINEERING PUBLISHING COMPANY

Entered as second-class matter, June 1, 1912, at the post-office at San Francisco, California, under Act of March 3, 1879

Telephone Sutter 5777. Cable address: Pertusola.
Code: Bedford McNeill (2 editions).

ANNUAL SUBSCRIPTION:
United States and Possessions, and Mexico..... $3
Other Countries in Postal Union..... $4

VOL. 5 SAN FRANCISCO, FEBRUARY, 1915 No. 8

TABLE OF CONTENTS

EDITORIAL: *Page* 316 REVIEW OF THE MONTH: *Page* 319

ARTICLES

ELECTRIC TOWING SYSTEM FOR THE PANAMA CANAL LOCKS. *Page* 321

Describes the design and construction of the system for controlling the movement of vessels through the locks, by which the danger of accident is minimized and that of serious damage practically eliminated. **Western Engineering,** February 1915. Illustrated.

THE HUMAN ELEMENT IN IRRIGATION MANAGEMENT. By *F. H. Newell.* *Page* 330

The consulting engineer for the U. S. Reclamation Service discusses the factors which make for the success of an irrigation project, with special reference to the human element, and makes suggestions regarding the treatment of this element by those connected with irrigation works. **Western Engineering,** February 1915.

WOOD BLOCK PAVEMENTS IN BERLIN. By *Robert P. Skinner.* *Page* 334

Data regarding preservative treatment for this type of pavement. **Western Engineering,** February 1915.

CONCRETE ROAD CONSTRUCTION IN WAYNE COUNTY, MICHIGAN. *Page* 335

Abstract of the report of the County Road Commissioners. The methods used in the construction of the county system of concrete highways are described. An industrial railway was used for the transportation of material for some of the roads, and data regarding the cost of hauling by this method are given. **Western Engineering,** February 1915. Illustrated.

THE DISTRIBUTION OF INDUSTRIAL OPPORTUNITIES. By *George Otis Smith.* *Page* 338

A discussion of the mineral and other resources of the nation by the Director of the U. S. Geological Survey, with special reference to the industrial opportunities in all parts of the United States resulting from the European war. **Western Engineering,** February 1915.

THE NEW SOUTH MOUNTAIN OILFIELD, VENTURA COUNTY, CALIFORNIA. By *Dorsey Hager.* *Page* 341

The author discusses the geological structure of this oilfield, recently developed in Ventura county, California. **Western Engineering,** February 1915. Illustrated.

GRADES AND EXCAVATIONS FOR ROAD CONSTRUCTION. By *A. D. Williams.* *Page* 343

The state road engineer for West Virginia summarizes his experience with regard to these important features of the 'good roads' question. **Western Engineering,** February 1915.

EFFECTS OF CREOSOTE ON YELLOW PINE AND CEDAR PILES. *Page* 346

Data regarding the condition of treated and untreated piles recovered from an old trestle. **Western Engineering,** February 1915.

FILTRATION PLANT AND FRESH-WATER SUPPLY FOR THE PANAMA-PACIFIC EXPOSITION. By *A. A. Willoughby.* *Page* 347

Describes the construction of the sand filtration plant, which is of the 'rapid' type. It has a capacity of 1,500,000 gallons per day, at the rate of 2 gallons per square foot of sand area per minute. Sulphate of alumina is used as a coagulant. **Western Engineering,** February 1915. Illustrated.

DEPARTMENTS

HINTS ON PRACTICE: *Page* 349
Power Pump Troubles. Dustless Concrete Floors.

INDUSTRIAL PROGRESS: *Page* 350
Large Gas-Engine for Ferry Service. Result of Tests of 225-Hp. Diesel Engine.

BOOK REVIEWS: *Page* 352

RECENT PUBLICATIONS: *Page* 353

ENGINEERS' NOTE BOOK: *Page* 353
Method of Figuring Flat Slab Construction.

CONSTRUCTION NEWS SUMMARY: *Page* 354

PERSONAL: *Page* 360

COMMERCIAL PARAGRAPHS: *Page* 360

CATALOGUES RECEIVED: *Page* 360

Generated on 2024-09-30 00:44 GMT / https://hdl.handle.net/2027/uiug.30112007838169
Public Domain, Google-digitized / http://www.hathitrust.org/access_use#pd-google
Digitized by Google
Original from UNIVERSITY OF ILLINOIS AT URBANA-CHAMPAIGN

EDITORIAL

ACTUAL COST of public works usually bears little resemblance to the appropriation. At times this is due to the reluctance of the people or their representatives to pay the cost of good work. On other occasions the engineer is to blame, either because his estimate is at fault or because of inefficient management of the construction. Recognition by the engineer of the importance of the business side of his calling will do much toward curing these evils. In the meantime, when a community completes an important public improvement for about 80 per cent of the original appropriation, the news deserves more than passing notice. Such has been the achievement of Orange county, California. Two years ago a bond issue of $1,270,000 was voted for the construction of 107 miles of improved highways. The work has now been completed and a balance of $240,000 remains in the treasury. The announcement of this remarkable result brought many delegations of citizens from all parts of the county to urge the claims of their respective sections for additional road improvements. The supervisors, however, have wisely decided to request the county highway commission to prepare plans for further highway improvements, and these plans will be used as a basis for determining what shall be done with the surplus. A tablet commemorative of this remarkable feat should be erected as an example for future generations to follow.

IN California, the open season for corporations continues. Now it is the oil pipe-line companies which are the sufferers, the Railroad Commission having decided that they are to be classed in future as common carriers. When the oil pipe-line measure was before the State Legislature two years ago, many protests were offered on good grounds. No method has been devised whereby a transportation company can deliver in their original condition at tidewater a number of small shipments of varying gravity, nor can we see how a company, already under contract to handle oil in quantity up to the capacity of its lines, can be made to accept additional shipments. These are a few of the physical difficulties confronting the pipe-line companies, and we can see no solution, apart from an order compelling them to install additional capacity sufficient to enable them to meet peak load conditions, regardless of whether the load factor permits an adequate return on the investment. And after this typical piece of 'constructive' legislation has been accomplished, how is it to benefit the small producer? The real problem of the oil industry today is that of marketing. An adequate selling organization is a costly piece of mechanism, and one that requires a large volume of trade to prevent the unit burden from becoming prohibitive. The storage question at terminals is another phase of the problem. Must the common carriers provide storage also, and will the Commission permit demurrage charges on shipments not called for promptly? The present price of oil carries little, if any, profit by reason of the fast growing surplus stocks. What will be the effect upon the market of the addition of many small producers when they are confronted with the necessity of immediately marketing their oil before storage or demurrage charges absorb what little profit there may be? A great industry operating at no profit or a loss benefits neither consumer nor producer. We believe the designation of the oil pipe-line companies as common carriers to have been a serious mistake. How obvious must a mistake become before it is corrected?

THE applications of portland cement concrete are increasing daily. First sidewalks and curbing, then highway base, while now in Wayne county, Michigan, concrete is used exclusively for roads without any other top coat or surfacing. The annual report of the Wayne County road commissioners, abstracted in this issue, gives valuable and instructive data on the methods developed. Of exceptional interest is the use of an industrial railway for transportation of material. This application is, we think, new as far as highway construction is concerned, and the cost data, therefore, are a good index as to what may be expected in case it should come into vogue elsewhere. It would be difficult to better a cost of 10 cents per ton-mile by any other form of transportation under the conditions as they existed. It is worthy of note that the average haul was only 3 miles; so, with the longer hauls common to most western highway projects, the relative economy should be greater; provided, of course, that the topography of the ground be favorable. Expansion joints are provided every 25 feet on the Wayne County roads, a precaution probably made necessary by the extremes of heat and cold to which the roads are subjected. Nevertheless, concrete has a way of cracking where it pleases, and California highway engineers construct concrete roads without any man-made expansion joints, relying on Dame Nature to attend to this detail. Tarvia, with a melting point of 80° Fahrenheit, is used for filling the cracks. This, while undoubtedly correct for Michigan, would probably not answer for the relatively warmer climate of California. The construction methods are decidedly interesting, and may well be carefully studied by highway engineers.

Generated on 2024-09-30 00:46 GMT / https://hdl.handle.net/2027/uiug.30112007838169
Public Domain, Google-digitized / http://www.hathitrust.org/access_use#pd-google
Digitized by Google
Original from UNIVERSITY OF ILLINOIS AT URBANA-CHAMPAIGN

The Oilfield Water Encroachment Problem

Progress is being made in the preparation of a law dealing with the water problem in the California oilfields. Bearing in mind some of the objections urged against the Sutherland bill during the legislative session two years ago, the State Mining Bureau drafted a measure which, while retaining the local district plan of government, allows but one vote for each individual owner or company, regardless of the size of holdings. It also provides for raising the necessary funds for carrying on the work by taxation based upon the total assessed valuation of real and personal property used in the production of oil.

A meeting of operators was held at Sacramento on January 15, and considerable objection was expressed to certain features of the bill, while some of the operators present were in favor of some form of state control. At a second meeting held at San Francisco, January 21, a rough draft of a measure providing for state control was submitted by the State Mining Bureau. In brief, this measure provides for the appointment of a commissioner of oil and gas under the Mining Bureau. He is to have control of the water problems in the fields throughout the state, and is empowered to appoint deputies for the various fields. Appeals from the decisions of the commissioner are to be referred to a board of three arbitrators, one to be appointed by the owner, one by the owners of the adjacent property, and the third to be the commissioner himself. This last provision was admitted at the meeting to be wrong in principle, as it permits the commissioner to pass upon his own rulings, and will doubtless be amended. Taxation is to be based upon production, equally distributed for all fields in the state. In the discussion that followed, a system based upon both production and acreage was generally favored, and a number of the operators present favored district as opposed to state control.

In government as well as in other lines of activity it is generally found advisable to make as much use as possible of the tools at hand. The 'tools' in this case are the local voluntary associations now doing useful work in many of the fields. Handicapped as they have been by reason of the lack of legal backing in enforcing their decisions, they have been a great constructive force for the good of the industry, and the situation in the fields today is vastly better than it would have been had not the public spirit of many operators come to the fore. It would seem to be pure folly to throw into the discard the great amount of money and labor that has been expended in building up the present organizations, while local pride and confidence is a great asset in insuring cooperation with organizations formed voluntarily among members of a community.

On the other hand, there are many manifest advantages in state control. There are a number of small oilfields in the state, such as those in Ventura county, too small to stand the expense of a complete district organization but nevertheless equally in need of protective measures. Of greater importance still is the need for state control in newly opened fields. A large part of the damage to a field is done during boom days. Does anyone suppose that in the Kern River boom of 1899, or the Midway boom of 1910, the operators would have voluntarily paused in the mad rush to produce on their own property to take the necessary legal steps to form a protective district? The very boundaries of such a district would have to be changed every thirty days in order to keep pace with discoveries and development. Under such circumstances, some form of state control is essential, and will constitute itself as the ounce of prevention that is worth a pound of cure.

Why should it not be possible to combine the good features of both systems? Let a state commissioner be appointed with powers as outlined above. Then let it be optional with the operators of a district to accept state control or form local districts along the lines suggested by the former Sutherland bill. A certain reasonable time should be allowed after the passage of the bill for an expression from the operators in each district as to which plan of organization they will adopt. The greatest possible control of local affairs by local organizations is a cardinal principle of the whole American system of government.

Under some such plan as this it is likely that where local associations already exist, new organizations would be formed immediately, preserving intact the former personnel and operating machinery. Other fields would perhaps elect to be under state control until such time as they felt financially strong enough to have their own organizations. Expenses attached to the state commissioner's office could be met by a small tax upon all operators as an administration expense, the balance of the levy being apportioned to the district from which the money had come.

As a measure conserving one of the most important natural resources of the State, it should have the hearty support of the whole people. It might even be advisable to defray the administrative expense from the general tax levy. This and many other details of the plan will have to be worked out after much discussion whereby the best thought of those most interested may be obtained. There are two points, however, that must be universally conceded: first, the necessity for protecting the fields from destruction, and second, that authority must be provided to penalize those who, in any way, injure or destroy their neighbor's property.

The Transcontinental Telephone

By A. H. BABCOCK

Press notices this week record the opening of the Transcontinental Telephone Line, the service on that occasion being extended as far as Boston, and to Florida by way of Washington. As a matter of fact,

Generated on 2024-09-30 00:50 GMT / https://hdl.handle.net/2027/uiug.30112007838169
Public Domain, Google-digitized / http://www.hathitrust.org/access_use#pd-google
Digitized by Google
Original from UNIVERSITY OF ILLINOIS AT URBANA-CHAMPAIGN

the first conversations over this line between New York and San Francisco were held in a trial by officials of the telephone company, July 29, 1914.

The inauguration of this commercial service is not due to any epoch-making invention by itself, but rather to a steady development of the art of telephony at the hands of many investigators and inventors.

The invention of loading coils, which compensate the line reactances, made possible extension of the range of telephonic communication to the distance where the energy given to the line at the sending station is sufficient to produce audible signals at the receiver. It did not permit, nor at that time was it otherwise possible to introduce energy into a circuit at any other point than at the sending station, as is done in telegraphy by means of automatic repeaters; and consequently leakages and distortion of wave form, the effect of which is called attenuation, circumscribed the boundaries of such communication, until the invention of the telephone repeater, which introduces energy into the circuit. For the first time, then, it became possible for telephone engineers to design a telephone line of practically indefinite length, provided only that along the line, at suitable distances, it shall be accessible for relay stations. This latter condition, of course, bars out extreme lengths of submarine telephone circuits, at least for the present. The telephone repeater is in effect an automatic repeater similar to that used for several decades by telegraphers to reinforce the strength of the signals from time to time.

It is interesting to note here that, by means of the repeater, unloaded telephone circuits have been worked from San Diego to Vancouver, British Columbia, and that the transcontinental loaded circuit has been worked between San Francisco and New York by means of three different forms of repeater. The line is a four-wire circuit, from which three telephone and eight telegraph circuits are obtained. Two of these circuits have been looped at New York, and the San Francisco officials talked to each other by way of New York, over nearly 7000 miles of circuit. Repeaters are placed at Salt Lake City, Omaha, and Pittsburgh for the New York circuit, and at Buffalo for the Boston circuit.

The fundamental principles at the bottom of the matter may be expressed briefly as follows: The frequencies of the waves produced in the telephone circuit by the human voice are such that the line calculations are based on 800 cycles per second. The difference in quality between human voices from the standpoint of the physicists is identical with the differences between the instruments of an orchestra. Any given note may be produced by any instrument of an orchestra (within the range of the instrument), and this note, when of a pure fundamental sine wave form, has the quality of a combination of violin and flute; like neither, but with the characteristics of both. The tone quality differences between the strings, the woodwinds, the drums, and the brasses are due entirely to the over-tones or harmonics superimposed by these instruments on the fundamental wave. So with human voices, their differences in timbre are due to variations in the overtones produced by different shapes of the vocal box, namely, the throat.

The line reactances, if uncontrolled, act in two general ways to interfere with the speech waves: first, they tend to change unequally the velocity of propagation of the waves; and second, they tend to complicate the wave formed, by introducing harmonics or overtones. The first produces an effect on the sound waves which may be illustrated by a file of men marching up a street. If all move with the same velocity, all will reach any given point at equally spaced intervals. If the velocities of certain individuals are altered, the times of arrival at any given point no longer are at regular intervals, and confusion results. The sounds that make up a syllable, for example, are not received at the same time intervals with which they were spoken, and the talk is 'muddled.' The second acts as follows: the harmonics produced by the reactances, if of the order of 800 cycles per second in frequency, tend either to augment or to suppress certain harmonics of the speech waves, and as a result these particular parts of the speech wave either will be raised beyond the range of the ear to hear them, or they will be completely wiped out. In either case the result is imperfect communication. It is the function of the loading coils to smooth out and to bring into synchronism the different harmonics due to the line reactances, and thereby to preserve the quality of the voice that is communicating.

The opening of this transcontinental telephone line may be taken as merely the first step in the broad plan of the American Telephone & Telegraph Co., universal service, which means that any subscriber in any part of the country may be able to communicate by telephone with any subscriber in any other part of the country. Contrary to the accepted ideas with reference to such things, these loading coils and relays, together with the arrangement of the wires of the circuit with respect to each other and to adjacent power circuits, are all capable of precise predetermination by means of the most intricate kind of mathematical analysis; leaving for the constructing engineers on the ground the comparatively simple task of carrying out a very definitely laid down program; and for the designing engineers in the laboratory, the correction by experiment of only very minute differences, due to the impossibility of measuring with the necessary precision some of the minute variations in position of neighboring circuits, or the unavoidable variations in them.

The whole installation may be taken as an example of the highest type of engineering, and as such it reflects upon the designers more credit than they can possibly be given by the public, through lack of understanding of the difficulties involved.

Generated on 2024-09-30 00:44 GMT / https://hdl.handle.net/2027/uiug.30112007838169
Public Domain, Google-digitized / http://www.hathitrust.org/access_use#pd-google
Digitized by Google
Original from UNIVERSITY OF ILLINOIS AT URBANA-CHAMPAIGN

REVIEW OF THE MONTH

'IN time of war prepare for peace' seems to be the watchword nowadays. American industry, confronted with the stoppage of supplies formerly obtained from Europe, has set about the production of these supplies within the boundaries of its own country. Perhaps the most notable progress has been made in the production of textile fabrics, while in numberless other instances wheels are beginning to turn in the manufacture of products that heretofore have not been considered possible to produce at all in the United States. Mr. George Otis Smith, director of the United States Geological Survey, has pointed out in this issue what may be expected to be accomplished in the mineral industry, while in manufactures the opportunities are hardly less great.

IF the war continues for some time, as there is every indication that it will, no less than an economic revolution will take place within our own country. At the same time, it must not be forgotten that an enormous purchasing power is being destroyed, little by little, in the European conflict. American exports to Europe had reached an immense figure, especially in the case of raw cotton and copper, which have become a drug on the market. A tendency is indicated thus far on the part of Americans to develop their manufactures so that in future the finished article rather than the raw material shall constitute the bulk of the exports. This is the most interesting phase of the present industrial situation. There is no fundamental reason why this cannot be accomplished in time, and the prospect of economic independence is one that augurs well for the future.

THERE are, however, wars and wars. The street railways have had their most hallowed precincts invaded by the army of the Jitneys, and by process of attrition patrons are slowly but surely being weaned away. Nobody seems to know how it started. Perhaps, like Topsy, it just 'growed.' At any rate, in the words of the toastmaster, "We have in our midst the Jitney," for better, for worse, and thus a problem is presented that must be dealt with as an existing condition, not a theory. Contrary to the usual procedure, the Jitney buses are not the product of the brain of some scheming corporation, but are in most cases operated by individual owners, although an association or union has recently been formed for mutual protection.

AS to the meaning of the word 'Jitney,' opinions differ. Dictionaries and encyclopedias are discreetly silent on the subject. It is said to be a colloquial expression meaning the smallest coin extant, and until some better meaning is available, we must be content. As to what people think of the Jitney, that is another story. The powers in charge of the street railway systems of San Francisco have one opinion, and the wage-working population of San Francisco another, and it is needless to say that these opinions are as far apart as the poles. Some months ago, we had a transportation problem, a genuine one, according to Mr. Bion J. Arnold, and it was a serious question how to provide means of transportation for the hordes expected to attend the Panama-Pacific Exposition. The city of San Francisco rushed into the municipal ownership of street-car lines, and spent millions on street railway construction. Enter Jitney, exit street-car traffic.

LIKE the cafeteria, the Jitney commenced operations in Los Angeles. Passersby one day noticed an automobile bearing the sign, "From Fourth and Spring streets to Westlake park, 5 cents." They laughed, shrugged their shoulders at the folly of the idea, and walked on. Within a few days, such automobiles began to multiply, until today they infest the main avenues of travel like a pestilence and have diminished the daily receipts of the street railway lines by more than $2500. San Francisco and the bay cities were next to feel the spread of the Jitney, while other Pacific Coast cities are equally afflicted.

ANY motor car that has wheels and will run is suitable for Jitney service. Some of them are relics of former days and present a motley appearance on the street filled with occupants trying to appear unconscious of the all-revealing sign proclaiming to the world that 5 cents was the price they paid. The dealer who has been worried to a frazzle over the problem of disposing of his stock of used cars is now wearing a broad, expansive smile. Soon the problem will be to supply the demand. Advertisements have appeared in the daily papers to the effect that cars suitable for Jitney service are for sale on terms of $100 down and $25 per month. Therefore, why perplex ourselves over complex questions of depreciation when the whole matter is thus arbitrarily settled.

THIS naturally brings about the question of profit for the operator. If it may be assumed that most of the cars now employed in Jitney service will operate for six months without any more than minor repairs, the fixed charge, outside of tires, gasoline, and lubricants may be placed at about $50 per month. Gaso-

Generated on 2024-09-30 00:45 GMT / https://hdl.handle.net/2027/uiug.30112007838169
Public Domain, Google-digitized / http://www.hathitrust.org/access_use#pd-google
Digitized by Google
Original from UNIVERSITY OF ILLINOIS AT URBANA-CHAMPAIGN

line can be purchased in San Francisco at 12½ cents per gallon. Tires on the average car cost $100 per set, and the guarantee is from 3500 to 5000 miles. Lubricating oil may be taken as costing about 75 cents for 500 miles. The average mileage per day is about 100. Gross receipts vary between $10 and $15 per day. Based upon a month of 30 days, the following estimate of cost results:

Maintenance and depreciation	$ 50.00
Tires, 3000 miles	60.00
Gasoline, based upon 10 miles per gallon	37.50
Lubrication	4.50
Total cost	$152.00

Assuming, therefore, the accuracy of the foregoing as a fair average condition, it is apparent that the individual profits from the operation of Jitney buses may range from $125 to even $300 per month, exclusive of the cost of licenses, taxes, or any other impositions that may be adopted by the city governments to regulate this new common carrier.

TO the statement that one hears so often, "It can't be done," may be made the answer, "It is being done," and to an increasing extent every day. Serious inroads are being made in the receipts of the street railways, so serious in fact that overtures are being made to the State legislature and to the Railroad Commission seeking for relief. The danger of accidents grows daily, and those who may be injured when riding in a Jitney may whistle for relief, as most of the owners are without means or financial responsibility. There is a movement under way to compel licensees of Jitneys to give a bond in the sum of $10,000 as security against damage suits in case of accident, and other more drastic means of regulation are being proposed. In the meantime, an association of Jitney operators has been formed in order effectively to fight hostile legislation. Street crossings are almost impassable to foot passengers, and the ordinary street traffic is being seriously discommoded.

EVIDENCE of careful discrimination on the part of the Jitney operators is shown by the absence of Jitneys on streets traversed by the municipal railways. These railways are the apple of the eye of the present city administration, and any encroachment upon their revenues would result in reprisals that would settle the Jitney question once for all time. So long as the United Railways are the only ones injured, both city and state officials do not seem to care, especially since those who patronize the Jitneys belong to the hoi polloi and can all vote. Most of the patrons are those who perhaps might never have an opportunity to ride in an automobile under any other circumstances, and 5 cents seems little enough to pay for the elation that comes from riding in the reputed vehicle of the rich, even though it be a 'little old last year's model.' Then again, those who have had to suffer from the discourtesies of the car platform men, and unfortunately there are many such, are exercising their prerogative to do as they please and are taking their revenge for the times when cars went by and left them standing in the rain and an 'I should worry' expression on the face of the conductor. Our sympathies lie all with the corporations in this case. And they need sympathy. Between the Scylla of the public utility commissions and the new born Charybdis of the Jitney, they have fallen upon parlous days indeed.

WHILE city supervisors and public service corporations are greatly exercised over the inroads being made by the Jitney buses in the earnings of the street railways, it perhaps is not inapropos to call attention to a few points about them which, in the light of present political and economic tendencies, ought to satisfy the most rabid reformer. In the first place, they offer free and unrestricted competition; second, they are not owned or operated by any aggregation of capital but in nearly every case are in the hands of individual owners; third, they ask for no exclusive franchise but rampage all over the city streets on routes selected by themselves; fourth, they are no petitioners of humble mien before the Railroad Commission, they issue no stock either preferred or common, they have no bond issues or short time notes, in fact they have neither security nor securities while their rates are admitted to be beyond cavil.

IS this a sort of city dweller's dream of a transportation Utopia? Perhaps it is, but the inevitable sequence of dreams must not be forgotten: one generally wakes up. The awakening in this case is apt to be somewhat varied in character and may be anything from a serious injury with no redress for the injured to the desire to possess an automobile of one's own, which is generally fatal, at least financially. If the issuance of Jitney licenses continues unrestricted, the end is inevitable. The traffic is definitely limited. When it is divided in too many parts, the operation of Jitney buses will have become unprofitable and therefore cease. In the meantime this is melancholy satisfaction for the street car company which must pay interest on great blocks of bonds and watered stock, and is losing the wherewithal to the Jitney bus.

SINCE the inauguration of the California Public Utilities Act, it became a matter of settled policy in the regulation of public-service corporations to protect the company already in possession of the field, provided that the service be adequate and the rates reasonable. In all justice, should not the grant of a franchise by a municipality carry with it an equal obligation to protect under the same conditions? If the spirit of the law is of any consequence, Jitney buses should not be allowed the use of any city street on which street-car lines are already operating under franchise rights granted by the city.

Generated on 2024-09-30 00:45 GMT / https://hdl.handle.net/2027/uiug.30112007838169
Public Domain, Google-digitized / http://www.hathitrust.org/access_use#pd-google
Digitized by Google
Original from UNIVERSITY OF ILLINOIS AT URBANA-CHAMPAIGN

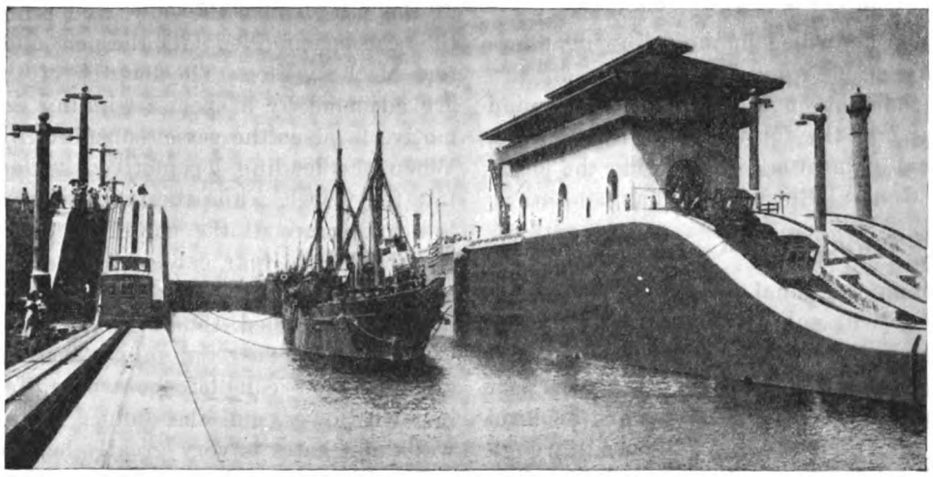

FIG. 1. STEAMER LEAVING UPPER EAST CHAMBER IN TOW OF ELECTRIC LOCOMOTIVES.

Electric Towing System for the Panama Canal Locks*

pointed a board of consulting engineers, men of international reputation, "for the purpose of considering the various plans proposed to and by the Isthmian Canal Commission for the construction of a canal across the Isthmus of Panama."

The majority report of this board of consulting engineers contains the following:

"The three accidents at St. Mary's Falls canal occurred within a period of nine years, where there is only one lockage of about 20 feet. If six locks should be adopted in a plan for the Panama canal, each having a lift of 30 ft. or more, as has been proposed in several projects, it would not be unreasonable, with an equal number of vessels, to look for six times the number of accidents in the same period of time, which would be at the rate of two per year. If groups of locks should be arranged in flights, as has also been proposed in some projects, the imminence of disastrous accidents would be greatly enhanced, as would be the amount of damage to the structures and to the vessels involved. Indeed, it is highly probable that the grave disaster of a great ocean steamship breaking through the gates of the upper lock and plunging down through those below might be realized."

It is true that the majority of the board favored the adoption of the sea-level canal; but the foregoing quotation showed the necessity, in their opinion, of safeguarding the passage of vessels through the locks.

Investigations of collisions between ships and lock gates invariably show that "there was a misunderstanding in signals between the captain and engineer." Bearing in mind that the engineer of a ship is so situated that he does not know the exact position of the ship, with respect to the lock, he cannot check his actions by the probable result. A system, therefore, which permits checking the movement of the ship with the signal given by the pilot or captain of the ship, will eliminate improper manipulations to a great extent.

Various systems are in vogue at drydocks which are based on the principle that the operator sees the result of his action. The employment of winches, or capstans, has been looked upon with a great deal of favor. These are usually placed at intervals along the dock walls, and the lines from the ship are carried forward to the successive capstans as the ship advances. Such a system involves the risk of the ship not being properly safeguarded when the lines are transferred to successive capstans. An improvement has been made by the installation of a capstan at the head of the dock, centrally located, and used for imparting a straight motion to the ship. Numerous lines from the ship to the dock wall are carried by men; and the capstans are employed to counteract any wind pressure, currents, etc., and assist generally in maneuvering the ship. While an improvement over former methods, it did not, however, possess the flexibility and reliability required for the operation of the locks of the Panama canal. Neither would it have eliminated the breaking of the lines at critical moments, which is regarded as one of the essential requirements in successfully handling ships in canal locks.

After a very thorough study of the entire problem of maneuvering ships through the locks of the canal, it became evident that they could not proceed through the locks under their own power, and that a substitute for the ship's power should embrace the following:

a. Ability to place the ship in proper relation to the lock.

b. Capability of keeping the ship to its course.

c. Accelerating and retarding the ship without rupturing the lines.

d. The lines when once attached should be used without change for lockage in flight.

e. A small number of skilled operators rather than

The President of the United States in June 1905 ap-

*Data furnished by General Electric Company.

Generated on 2024-09-30 00:45 GMT / https://hdl.handle.net/2027/uiug.30112007838169
Public Domain, Google-digitized / http://www.hathitrust.org/access_use#pd-google
Digitized by Google
Original from UNIVERSITY OF ILLINOIS AT URBANA-CHAMPAIGN

a large number of unskilled men to co-ordinate.

The towing system described in the following pages was designed and patented by Edward Schildhauer, electrical and mechanical engineer for the Isthmian Canal Commission; and the forty towing locomotives, and all the electrical apparatus for operating the locks, were built by the General Electric Company.

Towing System

In passing through the canal from the Atlantic to the Pacific, a vessel will enter the approach channel in Limon bay, which extends to Gatun, a distance of about 7 miles. At Gatun it will enter a series of three locks in flight and be raised 85 ft. to the level of Gatun lake. It may then steam at full speed through the channel in this lake for a distance of 24 miles, to Bas Obispo, where it will enter the Culebra cut. It will pass through this cut, which has a length of 9 miles, and reach Pedro Miguel, where it will enter a lock and be lowered 30 ft. Then it will pass through Miraflores lake for a distance of 1½ miles until it reaches Miraflores, where it will be lowered 55 ft. through two locks, to the sea-level, after which it will pass out into the Pacific through an 8½-mile channel.

The main features of all the lock sites are identical; and the following brief description of the Gatun locks, with special reference to the arrangement of the towing tracks, ship channels, inclines, and approaches, is given to enable the reader to obtain a clearer conception of the towing scheme in general, as well as the more detailed description of the locomotive which is to follow.

The general lay-out of the Gatun locks allows two ship channels, one for traffic in each direction. The channels are separated by a centre wall, the total length of which is 6330 ft. There are two systems of tracks, one for towing and the other for the return of the locomotive when returning idle. This, however, refers only to the outer walls. For the centre wall, there is only one return track in common for both the towing tracks. The towing tracks are naturally placed next to the channel side, and the system of towing utilizes normally not less than four locomotives running along the lock walls. Two of them are opposite each other in advance of the vessel, and two run opposite each other following the vessel. The number of locomotives is, however, increased when the tonnage of the ship demands it.

Cables extend from the forward locomotives and connect with the port and starboard sides, respectively, of the vessel near the bow, and other cables connect the rear locomotives with the port and starboard quarters of the vessel. The lengths of the various cables are adjusted by a special winding drum on the locomotive to place the vessel substantially in mid-channel. When the leading locomotives are started, they will tow the vessel; while the trailing locomotives will follow and keep all the cables taut. By changing the lengths of the rear cables, the vessel can be guided; and to stop the vessel, all the locomotives are slowed down and stopped, thus bringing the rear locomotives in action to retard the ship. Therefore, the vessel is always under complete control quite independent of its own power, and the danger of injury to the lock walls and gates is very greatly lessened.

The illustration in Fig. 2 shows how effectively the four locomotives keep the vessel under control and in the centre of the channel, as well as giving a general idea of the method of handling vessels of various sizes. They also show general views of the lock walls, towing tracks, and the inclines, the steepness of the latter being especially noticeable.

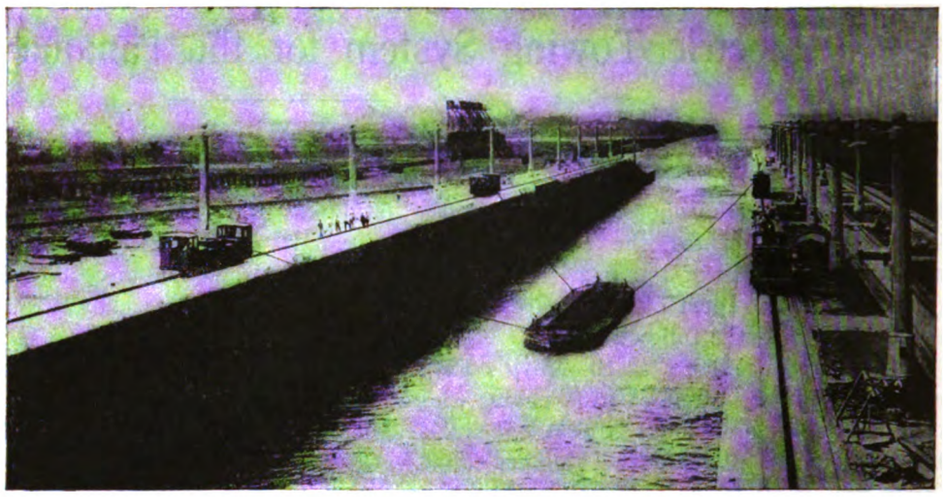

FIG. 2. TOWING LOCOMOTIVES RETURNING BARGES THROUGH GATUN LOCKS.

The towing tracks have a specially designed rack rail extending the entire length of the track and located centrally with respect to the running rails. It is through this rack rail that the locomotive exerts the traction necessary for propelling large ships and climbing the steep inclines.

A rack rail is also provided on short portions of the return track so as to lower the locomotives safely from one level to the next. The steepest slope is 26° or 44%, hence the need will be seen for rack rail even on the return track, it being noted that any traction locomotive with the usual wheel drive, even with the brakes set, would begin to slide on a 44% grade and therefore could not be controlled. With a rack rail, however, traction is limited only by the capacity of the driving motors and not by the adhesion of the wheel treads on the rails.

Generated on 2024-09-30 00:51 GMT / https://hdl.handle.net/2027/uiug.30112007838169
Public Domain, Google-digitized / http://www.hathitrust.org/access_use#pd-google
Digitized by Google
Original from UNIVERSITY OF ILLINOIS AT URBANA-CHAMPAIGN

A small portion of rack rail is shown in Fig. 3, 'A' being the rack rail proper and 'B' the approach to it. 'B' is hinged at 'C' so that it can be depressed on the approach of the rack pinion of the locomotive. The

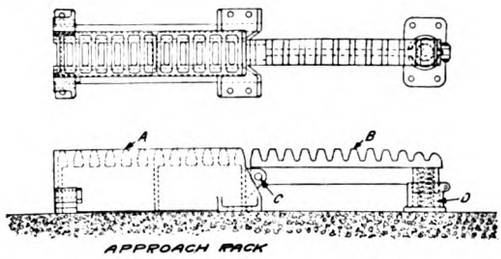

FIG. 3. RACK RAIL DETAIL.

teeth of the approach section are under size and shaped off at the extreme end so that the teeth of the pinion will mesh properly and prevent excessive strain on the pinion and the axle. The spring 'D' restores the approach to the proper position after the locomotive has passed over. The rack rail is of the shrouded type, and each tooth space has a drain-hole cast in the bot-

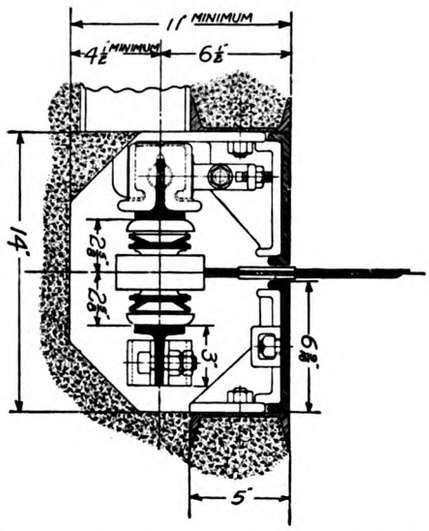

FIG. 4. DETAIL OF CURRENT COLLECTING DEVICE.

tom so as to carry off water and other accumulations to suitable drain pipes or ducts set in the concrete of the walls. A further feature of the rack rail is the projecting edges, which permit thrust wheels attached to the locomotive to run along the under side and prevent overturning of the locomotive in case some unforeseen operating condition should produce an excessive pull on the towline.

Three-phase, 25-cycle, 220-volt alternating current is used for operating the locomotives, and the current is supplied to the locomotives through an underground contact system. The collecting device is illustrated in Fig. 4, while Fig. 7 shows its position with respect to the track, it being adjacent to the running rail on the side remote from the lock. Two T-rails (shown in black section) form two legs of the three-phase circuit and the third leg is formed by the main track rails. A specially designed contact plow slides between the two 'T' conductors and transmits the power from the rails to the locomotive. This contact plow also passes through the slot opening in the conduit cover, and is flexibly connected to the locomotive in such a manner as to follow all irregularities in the tracks and crossovers, and therefore insures a continuous supply of power.

Locomotive Design

The working parts of the locomotive are supported by two longitudinal upright side frames No. 1, Fig. 5, of cast steel, connected by transverse beams No. 2, Fig. 6. These frames are in effect deep rigid trusses, having upper and lower members connected by posts No. 5, and diagonal braces No. 6, Fig. 5. The middle portion of each frame has its upper and lower members parallel and horizontal, but the end portions have their lower members inclined upward toward the ends of the frame. The pedestals No. 7 for the wheel axles No. 8 are located at the junction of these end portions with the middle portion, and are of the usual locomotive type, having vertical parallel jaws between which the journal No. 9 slides. Springs, No. 10, are interposed between the tops of the journal boxes and the tops of the pedestals, and the locomotive is thus mounted upon four wheels, No. 11, carried on the two axles, No. 8, the wheel-base being 12 ft., and the overall length of the locomotive over 32 feet.

Each axle is driven by its own motor independent of the other; and, as the construction is identical at both ends of the machine, a description of one will suffice for both. A cast steel suspension bracket, No. 12,

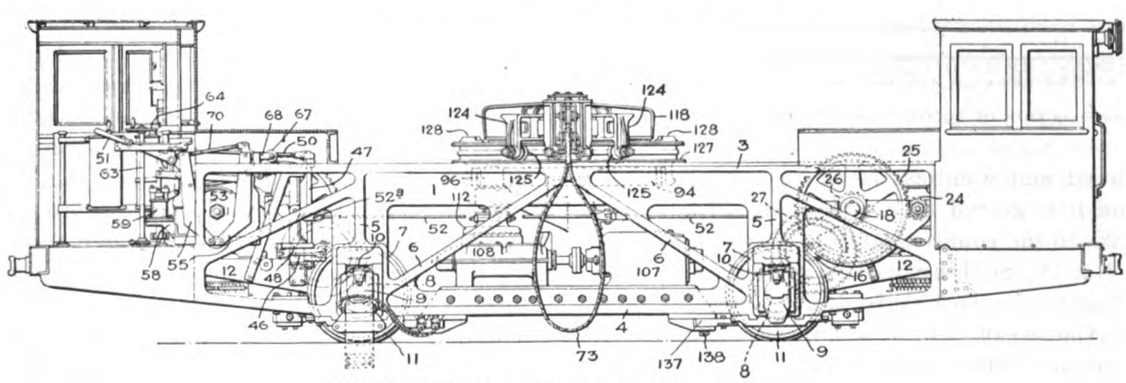

FIG. 5. SIDE ELEVATION OF TOWING LOCOMOTIVE.

Generated on 2024-09-30 00:44 GMT / https://hdl.handle.net/2027/uiug.30112007838169
Public Domain, Google-digitized / http://www.hathitrust.org/access_use#pd-google
Digitized by Google
Original from UNIVERSITY OF ILLINOIS AT URBANA-CHAMPAIGN

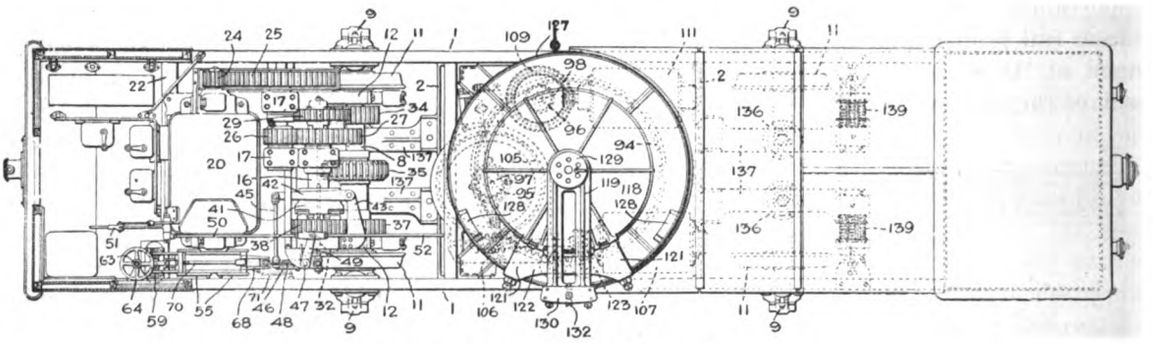

FIG. 6. PLAN OF TOWING LOCOMOTIVE.

is hinged at one end on the axle. Its bearing, which fit the journals on the axle, are secured in place by caps which are provided with oil cellars. The bracket is provided with bearings for a transverse jack-shaft, No. 16, parallel to the axle; and it has pillow blocks, No. 17, for a countershaft, No. 18, also parallel to the axle. It has a substantial horizontal platform to support the driving motor, No. 20; and its outer end is supported at each corner by two springs placed above and below a stationary angle iron and connected to the bracket by a bolt, so as to afford a yielding support in both upward and downward movements of the bracket.

The motor, No. 20, is of the three-phase, slip-ring

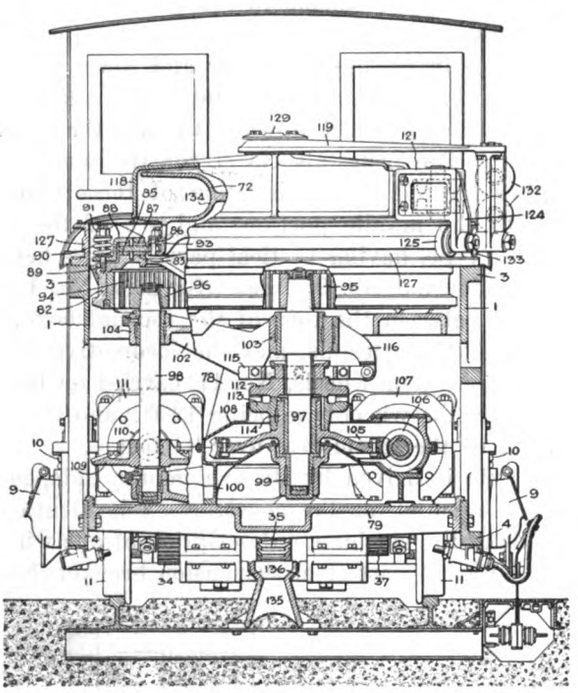

FIG. 7. CROSS-SECTION OF LOCOMOTIVE THROUGH WINDING DRUM.

type, enclosed and identical to the rugged steel mill design; and it is geared by a pinion, No. 24, and spur gear, No. 25, to the countershaft, No. 18, which carries a pinion, No. 26, meshing with a spur gear, No. 27, Fig. 8, keyed to the jack-shaft, No. 16. On the outer side of the spur gear, No. 27, are formed clutch teeth which co-operate with similar teeth, No. 28, on the adjacent side of a gear, No. 29, which is sleeved upon the jack-shaft and can be slid lengthwise thereon to engage and disengage the clutch teeth. The means for sliding this gear consists of a disc, No. 30, secured to the gear and having a central hub, No. 31, fitting over the end of the jack-shaft, Fig. 8. A rod, No. 32,

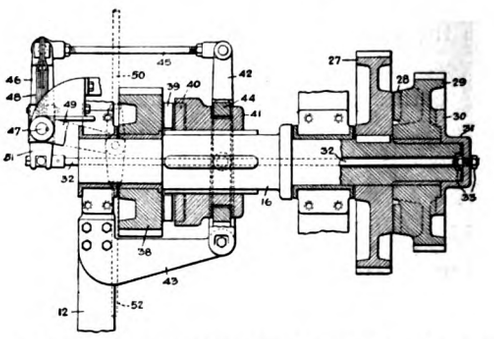

FIG. 8. LONGITUDINAL HORIZONTAL SECTION OF CLUTCH SHAFT.

Fig. 8, runs through a central hole in the shaft and through the centre of the hub, No. 31, to which it is connected by the nuts, No. 33, in such a manner as to permit the disc to rotate with the wheel and, at the same time, cause it to slide the wheel axially when the rod is reciprocated. A pinion is keyed to the axle, No. 8, and is wide enough to mesh always with the gear, No. 29, so that when the clutch teeth, No. 28, are engaged, the motor will propel the locomotive by the adhesion between the wheels, No. 11, and the rails of the track, and this happens only in case the locomotive is running without load and between inclines.

When the locomotive, however, reaches one of the inclines between the locks, the grade of which may be as much as 44%, or when it is towing a ship, the cog-rail system is utilized to enable the locomotive to climb the grade and exert traction necessary for pulling large ships. The cog or rack rail is laid between the track rails, and the locomotive is provided with a cog wheel or rack pinion, No. 35, Fig. 7, secured to or integral with a sleeve which rotates freely on the axle. A gear wheel, No. 37, secured to or integral with this sleeve, meshes with a gear, No. 38, Fig. 8, turning loosely on the jack-shaft. Clutch teeth, No. 39, on this gear can be engaged by the teeth, No. 40, on a clutch, No. 41, which is splined to a jack-shaft. A two-armed lever, No. 42, fulcrumed on a

Generated on 2024-09-30 00:52 GMT / https://hdl.handle.net/2027/uiug.30112007838169
Public Domain, Google-digitized / http://www.hathitrust.org/access_use#pd-google
Digitized by Google
Original from UNIVERSITY OF ILLINOIS AT URBANA-CHAMPAIGN

bracket, No. 43, straddles the shaft, No. 16, and is pivoted to a collar, No. 44, riding in a groove in the clutch, No. 41. The lever is connected by a link, No. 45, with one end of a lever, No. 46, Fig. 8, turning loosely on a vertical rocker shaft, No. 47. An elastic arm is keyed to the shaft and engages lugs on the lever, No. 46. The arm, No. 48, is composed of a laminated flat steel spring and a second arm, No. 49, is keyed on the shaft and connected by a rod, No.

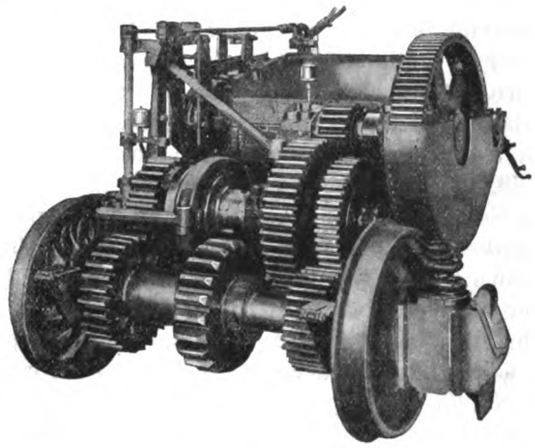

FIG. 9. FRONT VIEW OF TRACTION MOTOR UNIT WITH JOURNAL BOX IN PLACE.

50, with a handle in the cab of the locomotive. The handle can be locked by a suitable latch and notched quadrant, and the other end of the lever, No. 46, is pivoted to the rod, No. 32, so as to throw out the clutch, No. 28, when the clutch, No. 40, is thrown in, and *vice versa*.

The elastic arm, No. 48, serves to throw the clutches automatically, it being understood that the four jaw clutches in most cases do not mesh when thrown, but the operating handle is thrown full stroke and locked. This puts the springs under heavy tension. The locomotive is then started slowly; and when the clutches are in alignment, the springs throw them without any attention from the operator. The two rocker shafts at opposite ends of the locomotives are connected by the rods, No. 52, pivoted to the rocking arms, No. 52a, on the shafts and to an intermediate lever fulcrumed on the pedestal supporting the winding drum. Fig. 5 and 6 will be of assistance in making clear the foregoing description of the clutches and gear.

The two traction motors, No. 20, are controlled by suitable controllers installed in the cabs at the ends of the locomotives; and the circuits are such that both motors can be controlled from either cab, and can be operated singly or in multiple as desired. Current is taken from the supply conductors by a special current-collecting device, as shown in Fig. 5 and 7 previously described.

It will be observed that each motor, with all its gearing and clutches, is mounted independently of the frame of the locomotive, to which it is connected only by the springs, which give an elastic support for the outer end of the bracket, No. 12, on which the mechanism is carried.

In connection with each motor a powerful brake is installed; and, as during operation the motors are at all times geared either to the axles or to the cog wheels, the truck wheels, No. 11, are not provided with any brake rigging. The motor brake is shown in Fig. 5 and 6, but it is more clearly illustrated in Fig. 10 and 11. On the motor shaft is keyed a brake disc or drum, No. 53, Fig. 10, and to opposite sides thereof are applied the brake shoes, No. 54, carried by the brake levers, No. 55, which are pivoted at No. 56 on a stationary bar, No. 57, projecting from a frame, No. 58, which supports a solenoid, No. 59. The movable core of this solenoid is pivoted to the long arm of a lever, No. 60, which is fulcrumed at No. 61 on one of the brake levers. A rod, No. 62, connects the angle of this lever with the other brake lever, thus constituting a sort of toggle between the two levers. When the core of the solenoid drops, it actuates the lever and the rod in such a manner as to draw the two brake levers toward each other and thereby apply the brake shoes to the drum. The winding of the solenoid is in circuit with the controller of the motors, so that when the current is turned on to energize the motor windings, the solenoid will lift its core and thereby release the brakes. The first point of the controller raises the brakes without applying power to the motors, thereby providing a coasting point. But should the

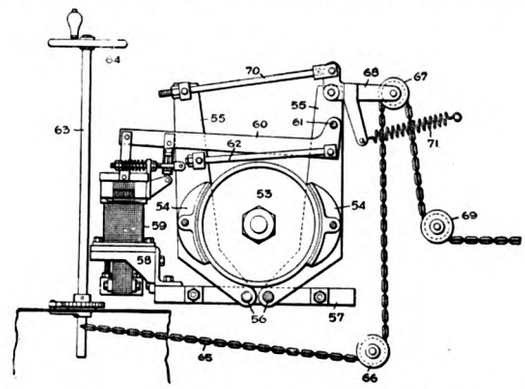

FIG. 10. SIDE ELEVATION OF COMBINATION HAND AND SOLENOID BRAKE AND RIGGING.

motor current be shut off, either intentionally or accidentally, the core will instantly drop by gravity and its weight will exert a powerful leverage upon the brake levers to stop the motor and the locomotive. This action occurs simultaneously on both motors, and brake action is powerful enough to stop the locomotive within two revolutions of the wheels.

In addition to this automatic brake, means are provided for applying the brakes manually in order to supplement the action of the automatic feature, if necessary, when descending a grade or where approaching a rack rail. An upright shaft, No. 63, Fig. 10, provided with a hand wheel, No. 64, has attached to it one end of a chain, No. 65, which runs under a stationary pulley, No. 66, up over a pulley, No. 67, on

Generated on 2024-09-30 00:45 GMT / https://hdl.handle.net/2027/uiug.30112007838169
Public Domain, Google-digitized / http://www.hathitrust.org/access_use#pd-google
Digitized by Google
Original from UNIVERSITY OF ILLINOIS AT URBANA-CHAMPAIGN

one end of an elbow lever, No. 68, pivoted to one of the brake levers, and thence under a stationary pulley, No. 69, to the opposite end of the locomotive. The elbow lever, No. 68, has its other arm connected by a rod, No. 70, to the other brake lever, the rod being adjustable in length as shown. The lever, No. 68, and rod, No. 70, constitute a toggle connecting the brake levers. A spring, No. 71, tends to lift the arm carrying the pulley, No. 67, and thus hold off the brake shoes. When the brake staff is turned, it winds up

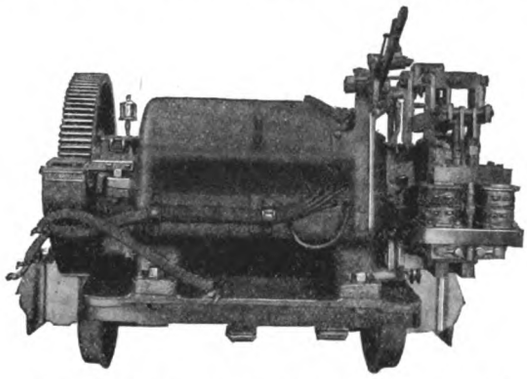

FIG. 11. REAR VIEW OF TRACTION MOTOR UNIT.

the chain and draws down the pulley, No. 67, thereby applying the brake shoes to the drum. In this way the operator can add hand power to the effect of the electric brake and thus produce a greater braking action without interfering with the automatic operation of the solenoid.

As appears from Fig. 6, the brake levers, No. 55, are double, only the rear member of each being shown in Fig. 10. This avoids any bending strains on the pivots. The levers, No. 60 and No. 68, and the rods, No. 62 and No. 70, constituting the two toggle sys-

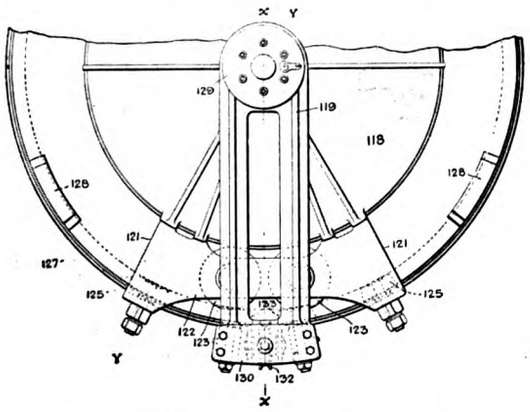

FIG. 12. PLAN OF CABLE-GUIDING DEVICE.

tems, are located between the two members of each lever, as are also the brake shoes, No. 54. The chain, No. 65, extends from the pulley, No. 69, to the similar point in the brake rigging of the motor at the other end of the locomotive, so that the operation of either of the brake staffs will apply both brakes simultaneously. It will be noted that while the hand and solenoid brake mechanisms operate entirely independently of each other, both apply braking through the same levers and wheel.

Passing now to the features which render the locomotive peculiarly adapted for towing purposes, it is observed that the drum, No. 72, Fig. 13, on which the cable, No. 73, Fig. 5, is wound, is located midway between the ends of the locomotive and above the upper member, No. 3, Fig. 5, of the side frames, so that the cable can be led off on either side of the machine and through a wide range of angles to the line of travel. The hub, No. 74, Fig. 13, of the drum is pivoted to the hub, No. 75, of a spider, No. 76, which in turn rotates upon the upper portion of a massive, tubular, vertical, cylindrical column, No. 77, rising from a pedestal, secured to the base-plate or floor, No. 79, Fig. 7, which is supported on the lower members, No. 4, or the side frames. The upper portion of the pedestal is held in a brace, No. 80, Fig. 13, which is shown as a heavy X-shaped casting, fastened to the upper members, No. 3, of the side frames and to two of the cross beams, No. 2. This brace fits the pedestal just below the shoulder, No. 81, Fig. 13, on which the hub, No. 75, is stepped.

The spider, No. 76, Fig. 13, supports a circular rim,

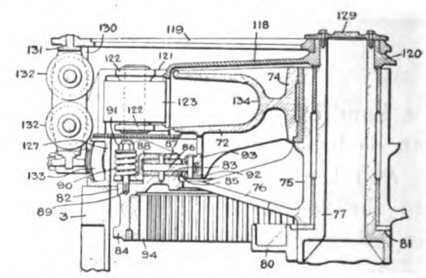

FIG. 13. CROSS-SECTION OF CABLE-GUIDING DEVICE.

No. 82, which has a horizontal upper surface, No. 83, and a flange, No. 84. On the surface, No. 83, is secured a flat smooth bronze ring, No. 85, and a second brass ring, No. 87, similar to the first, lies on top of a steel ring and is secured to a flanged follower, No. 88. Sixteen studs, No. 89, project up from the rim, No. 82, through holes in a horizontal flange of the follower and are encircled by strong springs, No. 90, which abut between the flange and nuts, No. 91, on the studs and press all three rings tightly together. The steel ring, No. 86, is secured to lugs, No. 92, on a flange, No. 93, projecting downward from the winding drum, No. 72, so that the rings constitute a friction clutch between the spider and the drum.

Inside the flange, No. 84, on the spider is secured a large internal gear, No. 94, with which mesh two driving pinions, No. 95 and 96, Fig. 7, secured respectively to two upright shafts, No. 97 and No. 98. Step bearings, No. 99 and No. 100, are provided for these shafts in the base of the pedestal, No. 78, Fig. 7, while the arms, No. 101, Fig. 6, and No. 102, Fig. 6, projecting from the upper portion of the pedestal just below the brace, No. 80, Fig. 7, constitute guide bearings, No. 103 and No. 104, for the upper portions of the vertical

Generated on 2024-09-30 00:44 GMT / https://hdl.handle.net/2027/uiug.30112007838169
Public Domain, Google-digitized / http://www.hathitrust.org/access_use#pd-google
Digitized by Google
Original from UNIVERSITY OF ILLINOIS AT URBANA-CHAMPAIGN

shafts. A worm gear, No. 105, Fig. 7, is clutched to the shaft, No. 97, and is driven by a worm, No. 106, on the shaft of an electric motor, No. 107, bolted to the base, No. 79, of the locomotive. This gearing is protected by a casing, No. 108. A bevel gear, No. 109, is keyed to the upright shaft, No. 98, and meshes with a bevel pinion, No. 110, on the shaft of an electric motor, No. 111, fastened to the base.

The motor, No. 111, with bevel gear pinion is used for driving the drum at a high speed when coiling the cable that has been cast off, and it remains permanently in gear. The other motor, No. 107, with worm gear drive, is used for taking in the cable when it is under load, and the drum operates as a windlass or capstan. Due to the greater gear reduction, it operates the drum at a much slower speed, and consequently, with motors of approximately equal size, a greater force may be exerted on the towline than would be possible with the lower speed reduction which is used with the high-speed coiling motor, No. 111. The worm-gear drive is disconnected from the drum when not in use. To accomplish this, a clutch is provided, having one member, No. 112, Fig. 7, splined to the shaft, and the other member, No. 113, attached to the hub, No. 114, of the worm gear, which is sleeved on the shaft. A lever, No. 115, Fig. 7, fulcrumed to a lug, No. 116, is pivoted to the hub of the clutch member, No. 112, and its other end is attached to the movable core of a solenoid, which is connected in the controller circuit of the motor, No. 111, so that whenever the circuit of the latter is closed to coil up the cable rapidly, the solenoid will lift its core and also the lever, No. 115, thus throwing out the clutch of the winding motor. The first point of the controller which operates the motor, No. 111, raises the clutch, and on the second point the motor starts.

The guide which directs the cable, as it pays out or winds up, is mounted so as to revolve on the axis of the drum. It comprises two angularly adjustable portions, No. 118 and No. 119, Fig. 12 and 13, the former being a circular bell which serves as a cover for the winding drum. The hub, No. 120, Fig. 13, of the bell is journaled on the upper end of the column, No. 77, being stepped on a shoulder thereon. At one side the housing is cut away to admit the cable to the drum, and on each side of this opening is bolted one end of a frame, comprising box-like ends, No. 121, Fig. 6, connected by two parallel bars, No. 122, Fig. 13, one above and the other below the opening. Between the bars and on either side of the opening are two upright guide rolls, No. 123, Fig. 12 and 13, having cylindrical faces and rotating on journals bearing on the bars, No. 122. At each end of this frame, arms, No. 124, Fig. 7, extend downward and support two rollers, No. 125, Fig. 7, mounted on horizontal studs, secured in the arms. These rollers are adapted to travel between the upper and lower flanges of a circular channel iron, No. 127, Fig. 13, which is fastened on top of the side frames concentric with the column, No. 77, and forms a track supporting the outer end of the frame, No. 121 and No. 122, thus relieving the column, No. 77, of the weight thereof. Stops, No. 128, Fig. 5, are fastened to the top of the channel iron, No. 127, to limit the angular play of the guide member, No. 118. They can readily be taken off, and the housing can be turned until the rollers, No. 123, are on the opposite side of the locomotive, after which the stops can be attached on that side to limit the movement of the housing.

The other guide member, No. 119, is a radial casting having one end turning freely on the hub of the member, No. 118, Fig. 7 and 12. A cap, No. 129, Fig. 12, is provided at the top of the column, No. 77, and protects the joint and prevents the guide members

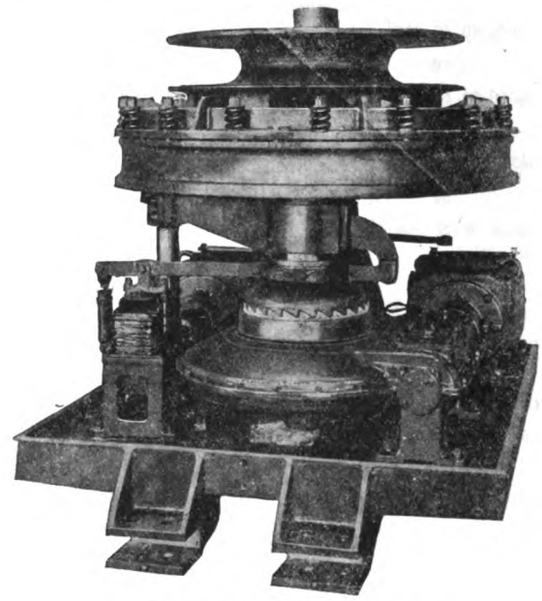

FIG. 14. WINDLASS AND BASE.

from accidentally coming off. The outer end of the member, No. 119, is an upright rectangular frame, No. 130, in whose top and bottom is journaled on a vertical axis a swivel, No. 131, carrying two grooved sheaves, No. 132, these also being led one above the other on horizontal axes. The edges of these sheaves are in close contact, so that their grooves form an opening through which the cable passes, approximately, in line with the middle of the guide rollers, No. 123. The frame, No. 130, is supported by rollers, No. 133, Fig. 7, running in the track, No. 127, and the guide member has an angular movement with reference to the member, No. 118, limited by the frame, No. 130, striking the ends of the frame, No. 121. When the cable is pulled either forward or backward from the middle position, which it occupies in Fig. 5, the swivel permits the grooved rollers, No. 132, Fig. 13, to move with it, and the guide member, No. 119, swings also, so that the rollers, No. 132, continue to support the rope in a line with the middle of the rollers, No. 123, without being themselves subjected to any side strain. All lateral strains are sustained by heavy guide

Generated on 2024-09-30 00:51 GMT / https://hdl.handle.net/2027/uiug.30112007838169
Public Domain, Google-digitized / http://www.hathitrust.org/access_use#pd-google
Digitized by Google
Original from UNIVERSITY OF ILLINOIS AT URBANA-CHAMPAIGN

rollers, No. 123, the cable moving up and down between them as it winds on the drum. The latter is in the form of a deeply grooved wheel, the groove being U-shaped. Fig. 14 clearly illustrates the construction.

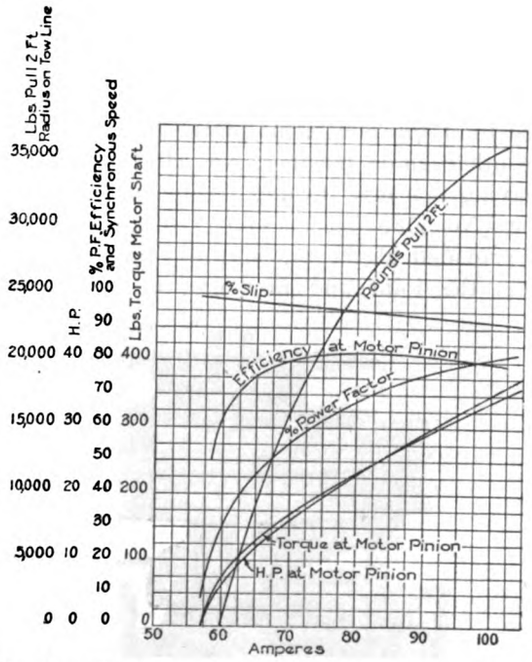

FIG. 15. CHARACTERISTIC CURVES OF WINDLASS MOTORS.

In order to resist the tendency of the locomotive to tip over when an excessive load comes on the cable, a stout rack rail, No. 135, Fig. 7, is, as previously mentioned, laid between the traction rails of the track, and two horizontal flanged wheels, No. 136, are ar-

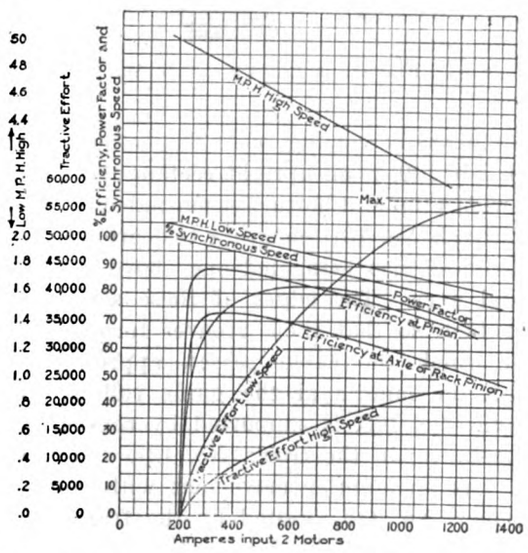

FIG. 16. CHARACTERISTIC CURVES OF TRACTION MOTORS.

ranged between each pair of wheels, No. 11, to engage the opposite sides of the rack. These wheels are carried on heavy bars, No. 137, whose inner ends are pivoted at No. 138, Fig. 5, to the base of the machine, so that the bars can move horizontally. Their outer ends are engaged by strong springs, No. 139, which afford the necessary flexibility for smooth operation.

One of the most important parts of the locomotive is the 'slip-friction' device consisting of two special alloy rings, mounted on the spider, as has been previously explained. Between these rings a steel disc is fastened to the rope drum, and the amount of tension on the towline is adjusted by the pressure between these three discs, and is obtained by tightening the spiral springs on the clamping ring. In order, therefore, to make the slipping tension of the towline proportional to the pressure between the friction discs, a rubbing surface having an absolutely constant coefficient of friction is essential.

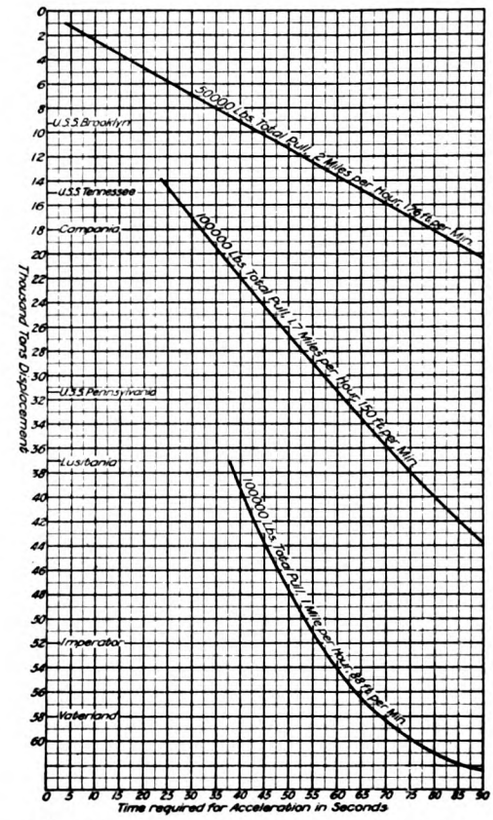

FIG. 17. CURVES SHOWING THE TIME REQUIRED FOR THE ACCELERATION OF SHIPS.

In connection with the slip test, further data on the slow-winding motor were obtained as per curves in Fig. 15. The winding motor is a 20-hp. (one hour rating), three-phase, high torque, squirrel-cage type, induction motor controlled from a drum type reversible controller in either of the two cabs. From the curves it is seen that the motor has ample power to take care of any sudden pull on the towline up to 40,000 lb., which is well above the normal requirement of 25,000 lb. The speed of winding is at the average rate of 12 ft. per minute.

The rapid-coiling motor is permanently geared to the drum, and is of the same type, size, and capacity as the winding motor. It is subject to its maximum load when accelerating the heavy drum to the high speed required for coiling or paying out the rope, this being sixteen times the slow-winding speed at full load, or about 200 ft. per minute.

Generated on 2024-09-30 00:46 GMT / https://hdl.handle.net/2027/uiug.30112007838169
Public Domain, Google-digitized / http://www.hathitrust.org/access_use#pd-google
Digitized by Google
Original from UNIVERSITY OF ILLINOIS AT URBANA-CHAMPAIGN

The slow-winding and rapid-coiling motors are operated by similar controllers, and the circuits are electrically interlocked so as to prohibit application of power to either motor unless the controller of the other motor is in the 'off' position.

Each of the two main traction motors has a rating of 75 hp., and is of the slip-ring induction type, operated by a system of contactors with master controller in each cab. The motors, by means of the change in gearing from straight traction to rack rail towing previously described, drive the locomotive at a speed of 2 miles per hour when towing and 5 miles per hour when returning idle. These motors act as induction generators running above synchronous speed when the locomotive is passing down the steep inclines, and thereby exert a retarding brake effect to keep the speed uniform. Speed, tractive effort, and efficiency tests were made, with results as per the curves in Fig. 16.

The curves in Fig. 17 give some interesting data on the time of acceleration of ships in the lock chambers. These values have been obtained from certain tests and theoretical calculations based on data given by several well known authorities.

For determining the resistance of ships in deep open water, the following formula is given by Captain Charles W. Dyson in his work, 'The Estimation of Power for Propulsion of Ships':

$$R = f S V^{1.85} + \frac{b D^{2/3} V^4}{L}$$

R = Resistance in pounds.
f = Surface friction coefficient, varying from 0.008 to 0.009.
S = Wetted surface in square feet.
V = Speed in knots per hour.
b = Form factor, varying from 0.35 for fine long ships to 0.50 for freighters.
D = Displacement of ship in tons.
L = Length of ship in feet on load water line.

The above formula gives, as stated, the resistance in deep open water; and it is well known that this is greatly increased when the ship is passing through narrow channels, due to the reaction of the water on the side walls and bottom. This additional resistance may be found by the following formula, given in a report by the State Engineer of New York on the proposed barge canal (see *Engineering Record*, June 29, 1901):

$$R_1 = \frac{r - 1.3}{6.8}$$

Where

$$r = \text{Ratio} \frac{\text{canal section}}{\text{midship boat section}}$$

In order to obtain the total ship resistance, the value of R previously obtained should be multiplied by the value obtained for R_1.

Summary

The towing locomotives as described and illustrated possess the following operating characteristics:

1. While towing, the speed can be regulated from zero to two miles per hour.
2. While running idle, the speed can be regulated from zero to five miles per hour, permitting return trips at increased speed.
3. The windlass will pay out or wind in cable at the low rope speed and at the full towline pull of 25,000 lb., either when the locomotive is running or at rest.
4. The windlass will pay out or coil in cable at the high rope speed with the towline taut, either when the locomotive is running or at rest.
5. The windlass is equipped with a safety friction device, which is adjustable to any predetermined value of the towline pull.

The first impression may be gathered that these machines are somewhat complicated; but, considering their many functions and the great flexibility for performing them, the design is in reality peculiarly simple. The locomotives have fully demonstrated in actual operation that the requirements contemplated by the engineers of the Isthmian Canal Commission under Circular 650 have been successfully met.

The locomotives have a net weight of 86,300 lb. and a gross shipping weight of 92,500 lb. They were mounted on specially designed skids and shipped by rail to New York, where they were loaded on board the ships as deck cargoes by means of a Merrit-Chapman 125-ton floating derrick.

During the first three months of commercial operation of the canal, from August 15 to November 15, the cargo transported through the canal and towed through the locks by the locomotives amounted to 1,079,521 tons. During the fiscal year ended June 30, 1914, the Panama railroad carried 643,178 tons of through freight between the two seaboards, and in the preceding fiscal year 594,040 tons. From this it is seen that between six and seven times as much cargo is passing over the Isthmus now as passed over this route when goods were transshipped by rail.

CONTRACT PRICES FOR BRICK AND CONCRETE ROADS IN ILLINOIS

Contracts have been awarded during the past year for 74 sections of roads, having a total length of 481,888 ft. ,or 91.27 mi., of which 56 sections with a total length of 388,369 ft. or 73.56 mi., have been concrete, and 18 sections with a total length of 93,519 ft. or 17.71 mi., have been brick. Almost 52 mi. of 10-ft. concrete roads have been contracted for at an average total price of $10,320 per mi., or $7250 for the pavement proper, which is at the rate of $1.23 per sq. yd. The minimum was $5960, and the maximum $9260 per mi., or $1.01 and $1.58 per sq. yd., respectively. The total price for the 18-ft. concrete roads has been $14,430 or $12,010 per mi. for the pavement proper, which is a little more expensive than the 10-ft. brick roads, which average $13,640 for a total cost, or $11,880 for pavement only.

Generated on 2024-09-30 00:46 GMT / https://hdl.handle.net/2027/uiug.30112007838169
Public Domain, Google-digitized / http://www.hathitrust.org/access_use#pd-google
Digitized by Google
Original from UNIVERSITY OF ILLINOIS AT URBANA-CHAMPAIGN

The Human Element in Irrigation Management

By F. H. NEWELL*

The engineer who has graduated from the construction of an irrigation system to the management of it, finds that his principal difficulties are quite different from those which he encountered during the construction period. The human element comes to the front; while the physical difficulties are not small, yet they sink into relative insignificance when compared with those which grow out of the dealings with hundreds or even thousands of individual water users who are to a certain degree proprietors of the works. For success the manager must be something of a diplomat and have a keen insight into the motives of individuals and of masses of men. The following paragraphs attempt to bring together in a somewhat elementary manner a few of the difficulties which arise out of the condition where one man, as irrigation manager, stands almost in the position of Providence in dispensing moisture and at the same time must be the agent or representative of the financial interests which have built the works.

Pioneers

The men who built the first irrigation canals in the arid West were typical pioneers forced by necessity to endure hardships with their ranks thinned and the average raised from time to time by the elimination of the weaker or less fit members. They came into the new and almost unknown country one or two at a time, or in little groups of acquaintances, bound together by ties of relationship or common danger. They learned to work together, to practice co-operation in irrigation, and gradually built up irrigation systems of considerable size and intricacy.

The modern pioneer is of a different type. He is attracted usually by glowing accounts of the relative ease of acquiring wealth in the West, and with erroneous ideas concerning the conditions to be met. He has been allured by the advertisements of land companies or of railroads that are interested primarily in the profits in homeseekers tickets or to be made from the freight rates on his household goods, and ultimately on the materials he may produce.

The widespread advertising with gorgeous lithographs naturally tempts the more restless individuals of the community, especially the men who have not made good at home.

There has thus arisen a class which has been called the 'professional pioneer,' always seeking for something a little better or for conditions where life will be easier; staying in one locality only a few months or years and then again seeking the El Dorado.

Selecting the Farmer

The success of an irrigation enterprise is more dependent upon obtaining speedily the right kind of farmers than it is upon the completeness of the construction and the adequacy of the water supply. This fact is generally overlooked; while skill and care have been shown in the selection of the project, in the determination of the amount of water which may be available, in the drawing of engineering plans, in the securing of all of the legal conditions and qualifications, and the safeguarding of all of the physical features of the work, yet at the same time there has been a general neglect of the more important item of the choice of the farmer or the selection of the men who will utilize these works and make them a success.

It has been assumed too often in the past that any man can take a piece of raw land, or even an area that has been partly subdued, build a home, start the cultivation of crops, choose the best kinds and arrange to market these in a remunerative manner. As a matter of fact, this is the weak point of the whole irrigation proposition. It is as though a high-priced, complicated machine, such as an automobile, were put at once into the hands of the first man who applied, and the safety of the machine and its occupants trusted to a man whose skill had never been fully shown. So it is with the newcomers on an irrigation project. About the only test which is applied is that of the financial ability of the man to make his first payment. In some cases this first payment is extremely small, and there is practically no proof even of this simple kind to indicate whether the applicant for an irrigated farm is really competent to undertake the business.

The results are as should have been expected. A great many of the would-be farmers are in no way suited for the work, and when it is made evident that they cannot make a success, there is no way by which they can be immediately placed elsewhere and an opportunity afforded to some other man who has the ability to make use of it. It is much as though a large factory had been built, equipped with modern machinery, and the applicants were then allowed to select their own machine or occupation, and it was incumbent upon the management to do the best possible with the people who came without knowledge of the processes, but who had been attracted by the outward appearance of one particular machine or another. The success of any such enterprise must obviously rest not only upon the adaption of the machine to the work, but of the people to the machine and to the work.

In the case of large private enterprises, it is often possible to a certain degree to select at the outset the class of settlers, or at least to hold the land until the man who seems to have suitable qualifications arrives, but in the case of government enterprises this condition is impossible, and the man who has not the quali-

*Consulting Engineer, U. S. Reclamation Service.

Generated on 2024-09-30 00:48 GMT / https://hdl.handle.net/2027/uiug.30112007838169
Public Domain, Google-digitized / http://www.hathitrust.org/access_use#pd-google
Digitized by Google
Original from UNIVERSITY OF ILLINOIS AT URBANA-CHAMPAIGN

ties to make a successful farmer, has not the strength, the perseverance, the thrift, or good judgment, must be permitted to select a farm if one is available, and to work out his own problems. He may perhaps consume years in wasted efforts in his own life, and incidentally waste the investment of others, before it is possible to get him to give way to some man better equipped.

Time Needed for Settlement

An agricultural community cannot immediately be placed upon a successful and permanent basis. Years are required for a body of farmers to establish social or business relations and get into the condition commonly known in other industries as a 'going concern.' In the case of a large manufacturing institution, it is possible to erect buildings within a few months, assemble workmen, and organize the operations so that in the course of a few months the larger features are well under way. This cannot be done with farming, and it is the failure to recognize this condition that has led to most of the disappointments and financial failures in irrigation enterprises.

Studies of the settlers on various projects show that upward of 75% of the first-comers or pioneers have left within the first three or four years. This is naturally to be expected, as the first-comers were usually the more restless members of a community who were always on the lookout for something new, and, when they had discovered it, were anxious to dispose of their acquisitions and move on to a still better opportunity.

Lack of Experience

Few of the persons who come into an irrigated region have had experience under such conditions as are found in the new home. Even if they have practised agriculture by irrigation before, the experience thus attained may not be applicable under the new conditions. Knowing little of the difficulties to be encountered, the newcomer, if he takes advice at all, is inclined to seek it from his neighbors, many of whom are little qualified to give sound advice; he is apt to imitate bad practices as well as good. The kind of experience that is needed for success under new conditions is not appreciated at first, and frequently those things which should be done, as shown by later developments, are neglected because they appear too difficult at the start. The item which is most habitually neglected is that of careful preparation of the surface of the land for irrigation. During the first year or two the farmer is so busy with building his fences and needed shelter for himself and animals, and in getting in his crop, that he is forced to skim over the surface rather rapidly, and having once tilled the soil he is inclined to leave it somewhat rough or rolling. The best farmers, however, if they do not have time during the first year to properly level all of their fields, make a practice of thoroughly preparing each year a few acres. For example, on a forty-acre farm especial attention may be given the first year to leveling off five acres, and the next year this area is extended. Thus in the course of a few years the surface of the entire farm is brought into condition for the highest economy in time and labor in applying water, and with consequent reduction of the amount of water applied and larger crop yields.

Need of Capital

One of the greatest needs in developing any country is the possession of ample capital. To acquire a 'going business' in agriculture under irrigation is relatively a difficult, slow, and expensive enterprise; one which requires a considerable investment in tools, farm animals, and seed, as well as in house, stable, and fences. The newcomers as a rule do not have enough money to equip themselves for the work in hand, and often do not utilize the money which they do have to the best effect for producing large results.

Some of them had more than the average amount of money when they came into the country, but they made the mistake of buying too much land or machinery. For example, one man came to a new project with over $7500 cash and a somewhat expensive family. Instead of confining his outlay to 40 acres of good land, he bought 160 acres and paid down $5000, putting most of the rest into a house, barn, and implements. He had literally nothing to live upon after he had made this investment; he found to his sorrow that he could not again sell any of the land he had bought, at prices which he had already paid. A neighbor coming in with less money and confining his efforts to 40 acres made good. It is not the possession of ample funds which insures success, but rather ample brains and experience with a very moderate amount of cash.

Incompetence

There are naturally attracted to all of these new opportunities a considerable number of persons who have not only made a failure elsewhere, but are wholly unfitted through lack of physical or mental strength to achieve success even under the best conditions. Thus there is apt to be in these new communities a larger proportion of unfit persons than in the older settled communities.

It frequently occurs that irrigation is attempted by men who are not able to make a success of ordinary agriculture, but who have faith that they can carry on this more difficult task with success, although they have failed in the easier operation of farming under humid conditions.

One of the greatest discouragements in operation and maintenance is the presence of many of this class of men, some of whom have taken up lands in the most conspicuous localities. While the percentage of these may be small, yet there are enough to create an unfavorable reputation for the project. As one old farmer expressed it: "We have too many of these doless fellows. If you gave them 160 acres with com-

Generated on 2024-09-30 00:46 GMT / https://hdl.handle.net/2027/uiug.30112007838169
Public Domain, Google-digitized / http://www.hathitrust.org/access_use#pd-google
Digitized by Google
Original from UNIVERSITY OF ILLINOIS AT URBANA-CHAMPAIGN

plete rights, they would be unable to make a living. The lands look like a 'widder' woman's place."

The competent men, those who have enthusiasm, energy, and a reasonable amount of skill and capital, gradually replace these 'do-less' men, and, coming to the project after the first rush is over or during the progress of the development, are usually able to purchase or obtain a small tract of partly developed land at reasonable expense, to this extent possibly profiting at the cost of their less fortunate predecessors.

Shifting of Population

The men first attracted to a new country are often disappointed in their anticipations, as they rarely find life as attractive there as they had hoped. Some are easily drawn away again by the allurements of other lands which are being opened. They belong to the type of adventurer seeking something better. A man of this class, after he has been a year or so on an irrigation project, usually succeeds in trading off his property, and during the first five years as many as three families in succession may have been established upon any one of the irrigated farms.

Because of this rapid shifting of population, permanent development does not proceed with as great rapidity as anticipated, and the irrigation manager is balked in his efforts at bringing about a better cultivation of the soil, notably because many of the original entrymen upon the irrigation projects were without financial means, while others living in nearby towns attempted to conduct some business in town and run the farm as a side issue. These persons quickly found that this was impracticable; farming requires all of the ordinary man's time and energy, and few men can successfully carry on two distinct classes of business.

Community Co-operation

Under earlier pioneer conditions in irrigation development, there was a strong spirit of co-operation in the community, due to the fact that the people settling together along a stream in the arid region were usually bound together by ties of friendship or former neighborhood association. The common difficulties and dangers brought about a high degree of mutual protection, and the communities in which some effective co-operation did not exist were soon wiped out.

The small irrigation canals were those built by this co-operative effort, and were thus operated, success being dependent upon mutual support and assistance. There also grew up the development of community methods of handling products and co-operation in marketing them.

In the cases where irrigation works are built by corporations or by the government, and settlers are attracted from all parts of the earth, there is not possible at the outset the same degree of community life. The result has been a more complete individualism, which, beneficial in some ways, has been injurious in others. Under the older systems it was usual for the community to appoint its own water-master, who saw to it that water was turned to the fields of the various owners. Under the larger corporate system, however, the farmers on an irrigation lateral are not neighbors in the full sense of the term. They do not have the same interest in each other's success, and it has rarely been possible for them to join together in distributing water fairly among themselves. It may take a generation for them to learn those lessons of mutual respect and forbearance in water distribution which the pioneers were forced to adopt in face of failure.

From this it results that in the large irrigation systems built by private capital or by the government, the method of distribution of water must be entirely different from that practised by the co-operative irrigators. The water must be taken to each man's farm because if left to be distributed among a small group there is always complaint that the man at the end of the lateral or the weaker member of the community does not get his share. It is necessary to have some one strong central authority to whom this man can appeal as against the propensities of his neighbors to take his share of the water.

Success Is Gradual

The farmers as a whole attain a slow but gradual increase in the value of their farms and products in spite of the frequent changes and failures which appear on the surface. They begin with land which has little, if any, real value beyond the expense incurred in bringing water to it. They make this land produce crops such that in the course of a few years there is created the basis for a permanent income. As before stated, the crop yield and its market value fluctuates within wide limits, the years of scanty production and good prices being followed by larger crop yield and low prices. These oscillate backward and forward with more or less regularity, but all the time making a steady upward growth.

It is desirable to have from time to time an inventory or taking account of stock of the real conditions to make apparent the fact that there is this gradual increase in true values. Otherwise there is apt to be discouragement because of the fact that one year did not appear to be as profitable as that preceding. While this may be the case for any particular year or locality, yet, taking the whole body of farmers, it will be found that they have advanced materially during four or five years.

Criticism

From the conditions before stated, of time required to settle a project, the shifting of the settlers and lack of capital, it necessarily happened that disappointment has been followed by complaint of irrigation in general, and of the climate and country, and particularly of the men who built the works and are operating them. The latter being on the ground are visible evi-

Generated on 2024-09-30 00:44 GMT / https://hdl.handle.net/2027/uiug.30112007838169
Public Domain, Google-digitized / http://www.hathitrust.org/access_use#pd-google
Digitized by Google
Original from UNIVERSITY OF ILLINOIS AT URBANA-CHAMPAIGN

dences of an organization or institution which induced them to settle, and are naturally held immediately responsible for all failures.

It is the duty of the project manager and his assistants to endeavor to ascertain the real facts concerning the various complaints and to remove the foundation for these as far as practicable. As a result of study of many score of individual cases, it is found that most of these come from the men who are not actually living on their farms, cultivating them, but who regard farming as a sort of secondary occupation. They are men, for example, who live in town and try to earn a support through the practice of law or some profession.

The real farmer, who is devoting his entire thoughts and energies to his farm, rarely has time to complain, even if he has cause, and is usually too independent to air his grief to the neighborhood. On the other hand, the type of man who spends most of his time at the corner grocery is full of complaints against the government, the weather, the country, the crops, the railroads, and all other factors, and usually takes sufficient time to make these fully known throughout the community.

The true views of the real farmer on the ground cannot be easily ascertained. He does not attend popular meetings because he has learned that the time is spent largely in discussions conducted by a few men, relating usually to socialism or semi-political questions, such as the initiative, referendum, recall, etc. He becomes tired of listening to the same orations delivered by the same men on all possible occasions. Thus it is that the expression of these so-called popular meetings and of petitions is apt to be merely the reflection of the views of a few townspeople.

Encouragement of New Men

A most important detail of the work of the irrigation manager is that of giving proper encouragement to the homeseekers or to the new men on the project, avoiding on the one hand excessive optimism, which ultimately must lead to discouragement, and on the other the pessimistic attitude which points out only the difficulties and failures which have followed. Considerable tact and patience is required in this, as the average farmer or settler has a very vague conception of irrigation and is largely ignorant of the difficulties connected with the handling of water. Thus he is apt to go to one extreme or the other in assuming that the application of water is a matter requiring extraordinary labor or skill, or that it consists merely in opening a gate and letting the water flow to the land while he is busy elsewhere or is sitting under a tree watching it flow.

To illustrate this attitude, an anecdote is told of an enthusiastic would-be irrigator who left word at the manager's office that when the *manager* was ready to irrigate the settler's field, the latter desired to be notified so as to see how it was done, not appreciating the fact that it was his own affair and one in which he must employ his own labor and time!

Experience has shown that much of the cause of irritation on a project can be removed if the project manager or his principal assistant can take the time to visit the individual irrigator on his farm, particularly in the case of a new man who is not yet accustomed to his surroundings. It is highly important that the project manager shall lay out his work so that this can be done and that he may be personally acquainted on the ground. Public meetings or conferences will not accomplish this, as at such meetings it is rarely possible to have the true conditions properly developed; nor can this be done as well in the project office as at the home of the settler. His confidence and the knowledge of his needs, the causes of friction, and an examination of the difficulties on the ground, enable an experienced manager to adjust at once innumerable little matters which in time might become aggravating.

Diffusing Information

Every reasonable effort should be made by the irrigation manager and his assistants to remove all just cause for criticism and to furnish information, such as frequently convinces the critic that he is acting under a misapprehension of the facts. Emphasis should be placed upon civility of manner in answering questions, even though the question itself may not be wholly pertinent or intelligible. The employees of the Reclamation Service should at least maintain a high standard of courtesy in this regard, even under exasperating conditions. It should be borne in mind that the average farmer does not understand the more or less technical phrases with reference to the measurement and flow of water, and has little knowledge of the fundamentals of land and water laws.

Many of the questions asked are those which cannot be answered fully by any person in the field, as they relate frequently to laws and decisions interpreting these. In such cases, if the question is apparently asked in good faith and is not merely the result of idle curiosity, the questioner should be asked to write out the question, so that he may state the necessary facts, and send the question directly to the main office. It must be borne in mind that many such questions relate to conditions which have not yet been decided and it is not possible in all cases to give a definite reply until the particular case has been passed upon.

Many of the questions asked are not put in such form as to be wholly intelligible, nor is the spirit in which they are asked one which is conducive to a frank discussion. Not every well disposed farmer is blessed with such equanimity that he does not become irritated or annoyed at what seems to him unreasonable requirements of law or of regulation regarding the distribution of water. The questions he asks are sometimes put in an offensive manner. The attempt should be made, however, to treat the question as put in good faith and to try to give a reply, showing clearly that

Generated on 2024-09-30 00:54 GMT / https://hdl.handle.net/2027/uiug.30112007838169
Public Domain, Google-digitized / http://www.hathitrust.org/access_use#pd-google
Digitized by Google
Original from UNIVERSITY OF ILLINOIS AT URBANA-CHAMPAIGN

the matter in hand is not one which is within the power of the local man to answer, avoiding argument and confining the reply to a courteous presentation of the fact that such matters are outside of the province of the local man.

Care should be taken not to increase the irritation of the water user or reply in such a way as will unnecessarily show his ignorance of matters which should be those of common knowledge. The manner of reply should always be that indicating an interest on the part of the employees in the welfare of the individual making the inquiry and of the project as a whole. The 'don't care' style of conversation should be avoided. Sometimes a simple explanation volunteered in the proper spirit will suffice to clarify matters, and a 'soft answer' on the part of an employee of the Reclamation Service, even to a farmer who may seem to be of the most refractory kind, may chance to 'turn away wrath' and make more effective the work of the organization.

In the operation of all large machinery, whether composed of metal or of men, there must be the use of a proper amount of lubricating material to prevent heating of the bearings. In the transaction of ordinary business it has been found that the use of courteous phrases and self-control, the avoidance of argument, are the lubricants which enable large business to be transacted rapidly and smoothly. In short, courtesy is as necessary in the points of contact in a large organization as oil is in the bearings of a steam-shovel or automobile.

It is highly important that the manager of a project have such knowledge or appreciation of agriculture that his attitude toward the farmers is sympathetic. At the same time this sympathy with the farmers' troubles should not be confused with weakness, as the successful manager must display firmness of purpose to a degree rarely called upon in other occupations. In choosing his assistants, he must exercise great care, as a tactless or careless canal rider may work infinite mischief. At the same time the manager, while appreciative of the difficulties of farming, must hold fast to the underlying principles of water distribution and not be guilty of concession where such action is opposed to sound policy.

WOOD-BLOCK PAVEMENTS IN BERLIN

By Robert P. Skinner

Wood blocks are used for paving the streets of Berlin only on the sharpest grades, to give a better footing, and on bridges and their approaches, to lessen the jar. According to official statistics, less than 2% of the street pavement was of wood blocks.

The wood blocks most used in Berlin are Swedish pine and, to a more limited extent, the Australian hardwood varieties—tallow-wood and blackbutt. The native pine and beech blocks are, however, also used in Germany, as are the American cypress and yellow and pitch pine. The wood used must be carefully selected, must be free from knots and cracks, and it is considered unwise to use, in the same section of pavement, woods from different countries, wood gathered at different altitudes, or wood of different species.

The dimensions of the paving blocks vary, the width ranging from 2.75 to 3.94 in., the length from 7.09 to 11.81 in., and the height from 4.72 to 7.09 in. The so-called Paris standard dimensions are 2.95 by 8.86 by 5.9 inches.

To prevent decay the wood blocks are impregnated with a zinc-chloride solution or with creosote oil. The zinc-chloride solution contains 2 parts by weight of chloride of zinc, $ZnCl_2$, 3°B., and 30 parts by weight of water. The creosote oil should not contain less than 5% of creosote and not more than 15% of naphthalene, and is distilled between 180 and 270°C. (356 and 518° F.). The specific weight of the oil is 1.07. The creosote-oil impregnation is considered preferable, because it also serves to forestall the subsequent swelling of the blocks by dampness after they have been set, and the resulting bulging of the pavement. To impregnate with creosote oil, the blocks are dried out for 3 to 4 hours in a tank or boiler at a temperature of 100 to 140°C. (212 to 284°F.), when they are transferred to another tank and allowed to remain for an hour in a vacuum of one-tenth to one-fifth of an atmosphere, after which creosote oil that has previously been heated to approximately 50°C. (122°F.) is pumped in and forced into the wood under a pressure of 6 to 8 atmospheres.

In constructing the wood pavement, the lower sides of the impregnated blocks are first dipped into hot tar or asphalt and then laid in a carefully prepared level layer of concrete 6 to 8 in. thick. The blocks are set side by side close to each other, although a space of 0.079 to 0.197 in. is left at the ends between the rows. This space is filled with tar and in some instances with asphalt. When asphalt is used, the intervening space is twice as large as when tar is the binder. To gage the space between the ends, wood battens of the proper thickness are used. The rows of blocks may be set either at right angles with the axis of the street, or at an angle of 45 degrees.

After the pavement has been laid, the surface is covered with a thin layer of asphalt or tar, over which a layer of coarse sand or fine gravel is spread. This, when pressed into the blocks, forms a durable coating which serves to prolong the life of the pavement. The sand or gravel is usually spread on the pavement once a month.

The cracking of reinforced concrete can be often explained by the discharge of electric current from the reinforced material into the concrete which causes the formation of rust. The addition of a slight amount of salt to the concrete increases the conductivity and the corrosion.—*Industrial Engineering.*

Generated on 2024-09-30 00:48 GMT / https://hdl.handle.net/2027/uiug.30112007838169
Public Domain, Google-digitized / http://www.hathitrust.org/access_use#pd-google
Digitized by Google
Original from UNIVERSITY OF ILLINOIS AT URBANA-CHAMPAIGN

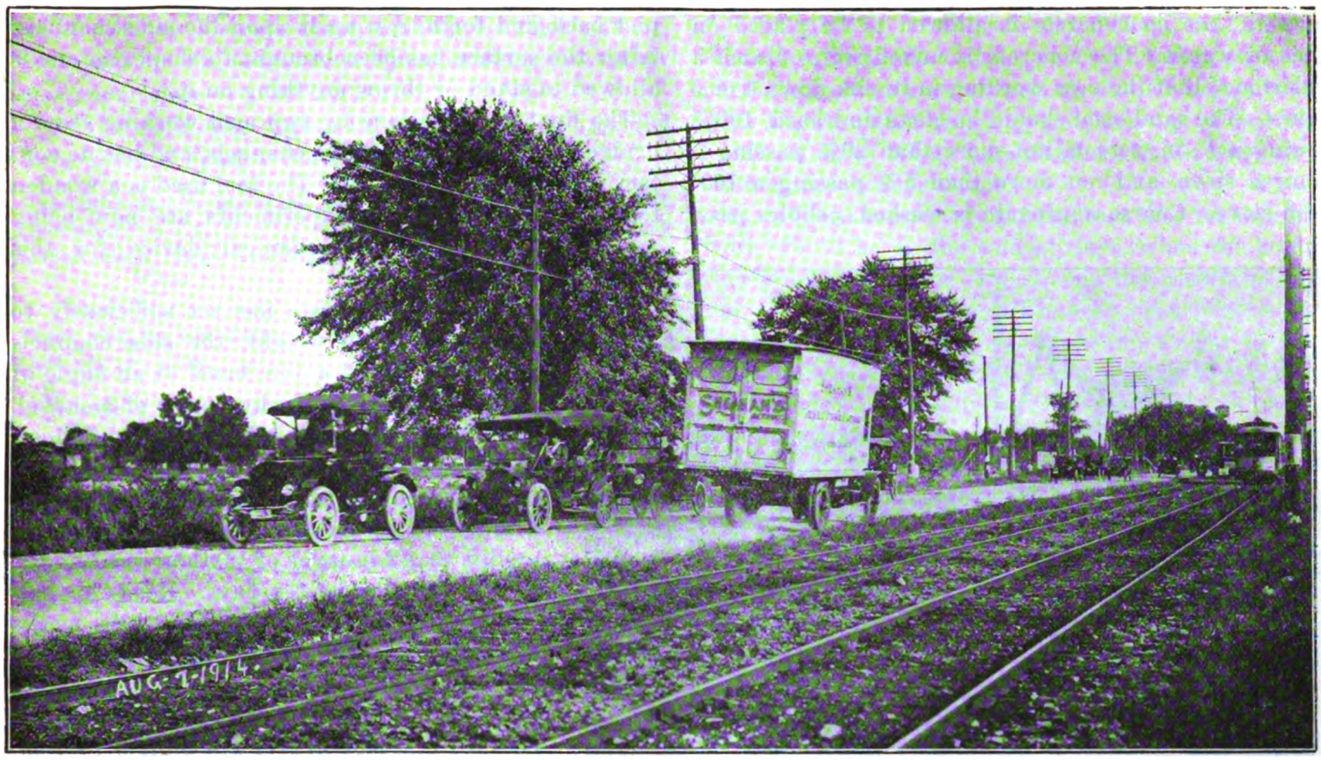

Concrete Road Construction in Wayne County, Michigan

Wayne county, Michigan, is noted for its system of concrete highways. The eighth annual report of the Board of County Road Commissioners is a valuable addition to existing data on highway engineering.

The Wayne County Road Commission was created in 1906. At first various types of road were constructed which were finally discarded, all new work being of concrete. There is now over one hundred miles of concrete road in the county. Although some of these roads are in their sixth year of service, they show no ruts, nor have any replacements been necessary. This type of road is comparatively low in first cost, is free from dust, furnishes good traction, is not slippery, has a low maintenance cost, and can be used every day in the year regardless of weather conditions.

In the preliminary grading, embankments are constructed in successive layers, not more than 1 ft. thick, and are rolled between placing of each layer with a 10-ton roller. Where the concrete is to be laid over old gravel or macadam, and is to be wider than the old roadbed, the latter is thoroughly loosened and the material spread for the full width of the new roadbed. In the case of fills of 1 ft. or less, the area is thoroughly grubbed. When the improved road is built alongside a street railway track, a 4-in. drain tile is laid between the track and the improved roadway, and an open ditch dug on the other side. In all other cases a ditch is dug on both sides of the road. The subgrade is usually prepared and shaped with scarifiers and graders, hauled by steam tractors or rollers, thus assisting in settling the foundation. Careful attention is given to the elimination of soft spongy places, and a 10-ton roller is run over the entire subgrade.

The standard width of concrete is 16 to 18 ft. on trunk roads and 15 ft. on secondary and tributary roads, with a minimum width over all of 24 ft. A considerable mileage of 12-ft. road has been laid, but this practice has been discontinued. The increased traffic resulting from an improved road justifies the additional width. Another consideration is that the cost of maintaining shoulders on a 12-ft. road is much greater than for one 15 ft. or more in width. The concrete is laid 6 in. thick at the sides and 8 in. at the centre, the subgrade being level. Six-inch channels instead of wooden forms are used at the sides. Expansion joints consisting of two thicknesses of asphalted felt (about ¼ in. thick) inserted between two Baker armor plates are placed 25 ft. apart.

A traction mixer is used, carrying a 20-ft. boom which swings over a 180° arc. The dumping bucket is run in and out on the boom by a power attachment, thereby saving much hand labor. A 1:1½:3 mix is used, one batch consisting of three sacks of portland cement, 4½ cu. ft. of sand, and 9 cu. ft. of gravel. Each batch receives sixteen complete revolutions in the mixer, and remains in the mixer one minute. A crew of thirty-two men will average 450 ft. of 15-ft. road in one day, and has sometimes laid as much as 525 feet.

The subgrade is wet thoroughly before placing the

Generated on 2024-09-30 00:47 GMT / https://hdl.handle.net/2027/uiug.30112007838169
Public Domain, Google-digitized / http://www.hathitrust.org/access_use#pd-google
Digitized by Google
Original from UNIVERSITY OF ILLINOIS AT URBANA-CHAMPAIGN

concrete, but no concrete is allowed to be placed on pools of water. The concrete is mixed wet, of such a consistence that the men working in it sink down 4 or 5 inches. The sand used should be clean and hard, 100% passing a ¼-in. screen, not more than 20% passing a 50-mesh sieve, and not more than 5% passing a 100-mesh sieve. Coarse aggregate is washed, pebbles passing a 1½-in. round opening and retained on a ¼-in. screen.

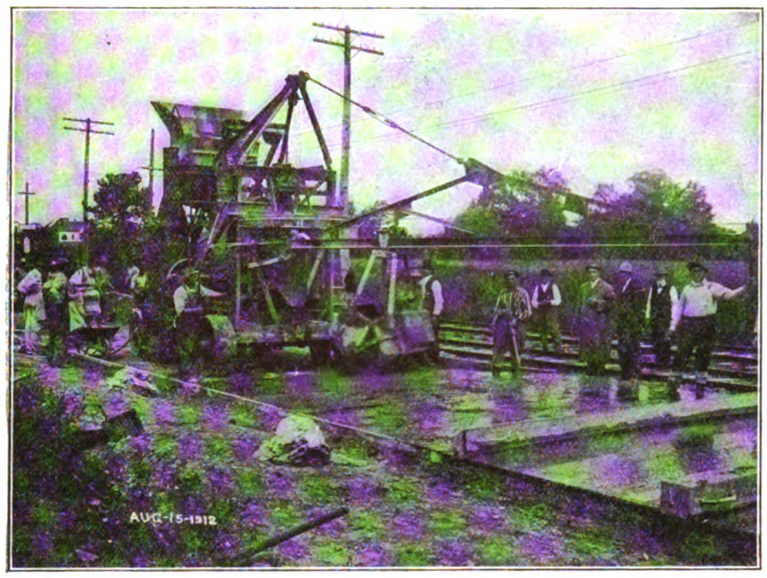

DEPOSITING THE CONCRETE.

'FLOATING' THE SURFACE.

The concrete is brought to grade and shape by a templet. The templet is made of 2-in. plank, preferably of one piece and about 2 ft. wider than the completed roadway. It is curved on the underside to conform to the finished surface. The templet is provided with iron handles, and the curved edge is shod with 1-in. angle-iron. The road surface is shaped by sawing the templet back and forth, resting it upon the side channels. After the surface has been brought to shape, no one is allowed to stand or throw anything on it.

The final finish is done by two men working from a bridge which rests on the side channels, and has no contact with the concrete itself. The tool used is a wooden trowel called a 'float.' Experiments are now being made with a mechanical device for this work.

After the concrete has set sufficiently to support its own weight, the side channels are removed and a 3-in. bevel at an angle of about 45° is cut away by means of a shovel, and the material cut off allowed to fall off to the side. This prevents a sharp division line between the concrete and the shoulders. The day after the concrete is laid, it is covered with a 2 in-layer of earth or sand and is sprinkled daily for ten days. Roads are not open for traffic for from three to six weeks after all the concrete has been laid, depending on the weather, the concrete setting more slowly in cold weather. Shoulders of crushed stone or gravel are built 3 to 7 in. thick, and 3 ft. or more wide on each side of the concrete. This work is not started until the road is at least three weeks old.

Transportation of material is an important problem. Except for very short hauls, teams are uneconomical and are seriously handicapped by bad weather and roads. Traction outfits are used to a considerable extent, a 10-ton roller being used, as a rule. On the earth roads such an outfit can haul only one wagon holding 7 tons. When a concrete road is reached, six wagons and 42 tons of material can be hauled, in itself an impressive argument in favor of road improvement. Bad weather interferes with the efficiency of the tractors in the case of earth roads also.

On some of the roads constructed during 1914, a 24-in. gage industrial railway has been used. The equipment consists of a 7-ton 30-hp. locomotive, sixty 1½-cu. yd. steel side-dump cars, and five 16-ft. flat cars. The track is furnished in built-up sections 15 ft. long, with steel rails and ties. Turn-outs and other specials are furnished in the same length section. A section weighs 225 lb. and can be handled by two men. The engine can haul thirty loaded cars.

Cars of material at the railroad siding are unloaded by a clamshell bucket, either to the stock-piles or to the narrow-gage cars. The train crew consists of an engineer and brakeman. The cars are tipped and dumped by two men, and dump far enough from the track to keep the materials from falling back on it. Work is started at the end of the construction farthest away from the railroad siding and the track is taken up

Generated on 2024-09-30 00:44 GMT / https://hdl.handle.net/2027/uiug.30112007838169
Public Domain, Google-digitized / http://www.hathitrust.org/access_use#pd-google
Digitized by Google
Original from UNIVERSITY OF ILLINOIS AT URBANA-CHAMPAIGN

and hauled back as the construction progresses. Transportation by this means is independent of bad weather and poor roads.

On the work done during 1914, the following amounts were charged against the industrial railroad:

Unloading and laying track	$ 731.22
Operation	3,660.00
Depreciation (15%) and repairs	3,899.34
Total	$8,290.56
Total haul, in ton miles	79,010
Cost per ton mile	$0.105

No allowance was made for a large amount of minor hauling, such as return of cement sacks, transportation of men, etc. The cost of hauling would have been considerably reduced if the railroad company had been able to deliver materials fast enough to keep the industrial outfit busy. Notwithstanding all this, a saving approximately equal to the cost of equipment was effected, as compared with other methods of hauling. The average haul was approximately three miles. With longer hauls an even greater comparative saving could be realized.

The same systematic supervision is exercised with regard to maintenance as in the case of construction. With the exception of keeping the drainage open, the principal work of maintenance on the concrete roads is the repair of cracks, and of spalled places at the expansion joints. A gang of seven men and a team, with a tar kettle, is used for this work. After experimenting with a lighter grade of tarvia, one between A and X, with a melting point of approximately 80°F., has been selected. After sweeping a crack clean with a wire broom, it is filled with tarvia heated to about 225°. An excess of tar is used so that it extends an inch or so beyond the edges of the crack. After standing a few minutes, the tar is covered with sand. The traffic removes the excess tar and sand and leaves a smooth surface. It is particularly important in a cool climate to have all cracks properly closed, on account of the danger of water getting under the pavement, with the resultant freezing and heaving of pavement. Small pit-holes due to imperfections in the concrete are treated in a similar manner.

It has been suggested that the best time for doing this work would be on the coldest days, when the contraction cracks would be widest, but the results of doing the work on hot, dry days, has been so satisfactory that it is almost always done at those times.

During the season of 1914 from 600 to 800 men have been employed continually. For several years past, except in a few minor instances, no contracts have been let, all the work being done by the county. The total value of the equipment in use is not stated in the report, but an idea of the amount may be obtained from the fact that $28,600 was spent for additional equipment, and $6700 written off for depreciation.

Every effort is made to reduce the actual depreciation to a minimum. Each construction crew is furnished with a capable mechanic, whose duty is to keep all equipment in the best condition. During the winter all machinery is overhauled in the machine shops at the central storage yard.

An idea of the cost of the work in general may be obtained from the figures on a road constructed during the past year. It should be remembered that the thickness of concrete used is greater than is customary for the milder climate of the Pacific coast.

Length, miles	4.2
Width of roadway, feet	15
Cost per mile	$16,700.00
Cost of cement per barrel	1.70
Cost of cement per mile road	5,100.00
Cost of sand per cubic yard	1.70
Cost of sand per mile road	1,110.00
Cost of rock per cubic yard	1.70
Cost of rock per mile road	3,000.00

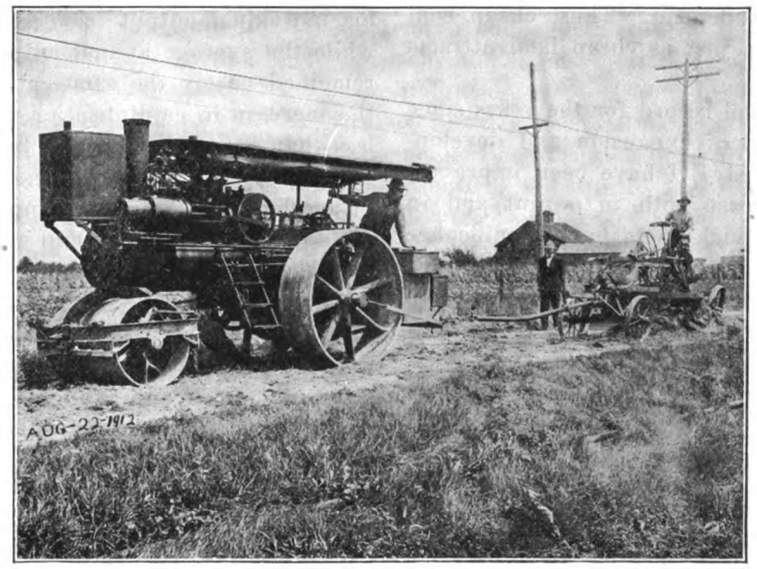

GRADING BEHIND TRACTION ENGINE.

Generated on 2024-09-30 00:50 GMT / https://hdl.handle.net/2027/uiug.30112007838169
Public Domain, Google-digitized / http://www.hathitrust.org/access_use#pd-google
Digitized by Google
Original from UNIVERSITY OF ILLINOIS AT URBANA-CHAMPAIGN

Distribution of Industrial Opportunities*

By GEORGE OTIS SMITH†

Four constituents enter into the reaction that we term industry. Two of these, brain and brawn, are organic compounds, and two are perhaps to be regarded as inorganic—money and material. None of these components is wanting here in the United States, and in fact their abundance affords the best reason for an optimistic outlook upon the present industrial situation. While in nowise overlooking the large importance of labor and engineering skill and capital as factors in the establishment of new enterprises or the expansion of old industries, I wish to address my remarks chiefly to the subject of the distribution of the raw material that is no less essential to a nation's industry.

In the highly differentiated system of production and commerce, the place factor has assumed large influence. The growth of transportation agencies makes the whole world tributary to both producer and consumer, with the result that keen competition tends to localize and specialize production. By way of contrast, think of the industrial conditions of a century ago. Our grandmothers were in a way chemical engineers. Yet, to them, for instance, potash presented no international problem, but as soap-makers they utilized that home supply that gave the material its common name. In those days, as a poet has said,

> "Home was a factory, life a trade,
> And Mother a Captain of Industry."

Today, facility of transportation has changed all this, and industrial opportunities distribute themselves in accord with fairly definite though often complex principles. Of the four constituents of industry, labor and capital and brains are all more easily transported generally than the crude materials upon large tonnage of which the industry must depend. Thus, cheap coal will attract manufacturers just as cheap land attracts farmers.

In studying the statistical record for the years since 1880, which is the period of expansion and development of the mineral industry, I have been impressed with the marvelous increase both in output and in efficiency in operation. Such facts have significance as we face the future. For this third of a century just past, the growth of the mineral industry can be summed up in the statement that the value of the output has increased nearly sevenfold, while our population has less than doubled. If we compare directly the output per capita of population, the record of increase in the more important mineral products becomes really instructive or even inspiring. Thus in this period of 33 years the consumption of coal per capita has increased from less than a ton and a half to nearly six tons, an increase of 337%. Similarly, the production of iron ore increased 357%, petroleum 391%, copper 1200%, cement 2087%; but gold and silver increased only 23 and 22%, respectively, while with lead the increase was 125%, and zinc 638 per cent.

If statistics for the more important agricultural products are studied in a similar manner, it is found that the total increases in the same period have not much more than kept pace with the growth in population. This is true of the two leading grains, corn and wheat, the one having somewhat more than doubled, the other not quite doubled, in the third of a century, so that the per capita production shows only a small percentage of increase. With cotton the gross increase has been larger, approaching 130%; but wool has utterly failed to increase as rapidly as the population. It is only sugar that shows an increase, both in domestic production and consumption, at all comparable with that of the half dozen minerals mentioned, the per capita increase being 394%, or about the same as the other carbon compounds, coal and petroleum.

An even more gratifying phase of this mining development is the marked increase in man's productive capacity. Let us take the 20-year period 1889 to 1909, and analyze the coal-mining record. Roughly stated, the number of mine-workers a little more than doubled in that period, the output of coal more than trebled, and the capital investment more nearly quadrupled. The exact percentages are 123% increase in employees, 226% increase in production, 252% increase in capital. Stated in terms of efficiency, the mine-worker increased his individual output from 471 to 691 tons per year, while the average annual output per dollar of capital remained nearly the same, about two-fifths of a ton, the increase in capitalization per ton of output being less than 8%. Most of this increase in capital outlay was due to equipment expenditures, the improvement in mechanical equipment appreciably adding to the mine-workers' efficiency and comfort.

In iron mining the record for the same period is even more striking; the number of miners increased less than one-half, the capitalization nearly trebled, and the output nearly quadrupled. In the iron mines, then, both labor and capital became more efficient, the output per miner increasing from 385 to 995 tons and the production per dollar of capital from one-seventh to one-sixth of a ton. In the case of coal mining, we know that this improvement did not halt with the census year of 1909, for since then the coal output per miner has increased another 71 tons, or more than

*Delivered at the Philadelphia meeting of the American Institute of Chemical Engineers, December 2, 1914.

†Director, U. S. Geological Survey, Washington, D. C.

Generated on 2024-09-30 00:45 GMT / https://hdl.handle.net/2027/uiug.30112007838169
Public Domain, Google-digitized / http://www.hathitrust.org/access_use#pd-google
Digitized by Google
Original from UNIVERSITY OF ILLINOIS AT URBANA-CHAMPAIGN

10% in the four-year period. All this tells the story of steadily increasing efficiency of mine worker, mine equipment, and mining methods—that is, of the contribution by labor, capital, and engineering.

When I speak of the distribution of raw material, I do not, of course, shut my eyes to the influence of markets upon the location of industry. The development of transportation systems makes the problem of markets a most complex one. Cheap transportation may take away a home market from an industry, or it may furnish a foreign market. The industrial independence of the small community of a century ago has given way to the system under which your dinner table may represent the tribute from several continents. Even in a country so diversified as ours in its natural bounties, domestic production of everything consumed is not desirable nor profitable. Exchange of commodities with foreign countries becomes necessary, for instance, just as soon as America can mine and smelt copper or produce and refine petroleum more cheaply than it can grow tea or raise sheep or cattle; then the home market for cheap meat and wool and tea necessitates a foreign market for our copper and oil. Of course, the more we, as a people, are independent of goods sent from other countries the less we are dependent on a foreign market for our own products. Large imports necessitate large exports, else the balance of trade will swing too far on the wrong side. Nor can we shut our eyes to the volume of exports needed to meet the interest obligations due the foreign capital invested in our railroad and industrial securities.

So it follows that in planning industrial development, independence is the goal toward which a nation should face, but not a goal which it should have either the intention or the desire to attain. As we look toward the south we find that our commerce with South America for the last four years has been one-sided to the extent of an unfavorable annual trade balance averaging more than 80 millions of dollars. The fact that the balance of trade is against the United States in two of the three 'A B C' countries should be taken only as an invitation to export more. That 80 millions not only measures the present opportunity for exports to South America, but also suggests the chance for further development of trade relations. We need meat and hides from Argentina, tin ores from Bolivia, rubber and coffee from Brazil, nitrate from Chile, platinum from Colombia, cacao from Ecuador, wool from Peru and Uruguay, and coffee from Venezuela—what can we export in exchange?

To increase industrial prosperity, this country needs to export finished rather than crude products and to import raw materials rather than manufactures. It is the product of American labor rather than the bounty of our natural resources that preferably should go into the world's markets. Betterment of industrial conditions can come best through expansion of manufacturing. The increase of the element of labor in the product exported will mean that we are not bartering away our heritage of natural resources, but rather that we are using these resources as a basis simply for the expenditure of labor, which renews itself.

As the engineers of America study this matter of expansion of manufacturing, it becomes evident that the distribution of raw material and of power is the key to industrial opportunities. So narrow, however, is the usual margin between success and failure that the practical proposition cannot be stated in so general terms. The chemical engineer requires not only qualitative but quantitative facts with which to start, and fortunately the geological engineer has come to realize this requirement. What are the mineral resources and where are they?—these are the two questions to be answered by the geologist. The answer to the 'what' must be expressed in exact terms, and the value of this or that mineral to industry usually depends upon very specific factors. To illustrate: the knowledge derived from a study of thousands of rock analyses that the element potassium constitutes 2.49% of the earth's crust possesses scientific interest and value, but as a starting point for practical work, chemical engineers would prefer a series of a dozen or two analyses of brines and bitterns from Western marshes and Eastern wells; yet even these analyses, however accurate, would avail little except as the geologist would furnish also a quantitative statement regarding the volume represented by such sample—that is, the extent of the deposit available for utilization. And here the scientific statement of relative abundance of potassium in the earth's crust comes in to contribute to the practical work as affording a measure of probability in extent of deposits when discovered.

A source of gratification to the government scientist, especially in the past few months, has been the fact that, under new and special demands, many bits of knowledge that had before been only interesting and incidental details in the scientific study of mineral resources, suddenly came to possess value recognized and appreciated by the producer and consumer. The dollar mark attached itself to these facts over night.

Already readjustment of domestic industry under present conditions has resulted in the development of American substitutes for imported material. Sales of domestic manganese ores have been made to the glass trade, and production of ferromanganese on the Pacific Coast is reported. The manufacture of zinc-dust has followed the shutting off of the foreign supply, and barite from the South has begun to replace the German imports. Medicinal oils derived from American crude have been placed upon the market by at least two refining companies and advertised as equal in every particular to the Russian article. Several firms have expressed their intention of manufacturing magnesium chloride from California magnesite, at least one shipment of which has been made to the East, and others are to follow *via* the Panama canal. In the

Generated on 2024-09-30 00:46 GMT / https://hdl.handle.net/2027/uiug.30112007838169
Public Domain, Google-digitized / http://www.hathitrust.org/access_use#pd-google
Digitized by Google
Original from UNIVERSITY OF ILLINOIS AT URBANA-CHAMPAIGN

western states efficient substitute has been found for the Danish flint pebbles used in the tube-mills. In California, river pebbles of quartz are used, and in Idaho and Nevada pebbles are manufactured from local rock, and the reports from the mill men are to the effect that these substitutes are giving satisfaction and lower costs.

In considering fuel and its bearings upon industrial opportunity, too much emphasis can hardly be placed upon the distribution of the world's coal. Significant facts are that 99% of the world production is mined in the northern hemisphere, and that, of known reserves of coal of all grades, the southern hemisphere possesses only 3½%. So too, not only does the United States mine and consume 40% of the world's annual output of coal, but this country alone possesses five times as great a tonnage of unmined coal as does the whole of Europe, and more than 1500 times as much coal as is known to exist in South America. Do not these facts contain the promise that the manufacturing industry of this country will continue to furnish manufactures for export to Europe and South America in increasing amounts?

When we consider the distribution of coal production and coal reserves, it is noteworthy that coal is mined in thirty states, and that over 16% of the area of the United States, not including Alaska, is underlain by coal beds. While Pennsylvania has for a century led in coal mining and thereby possessed a proud leadership in so many industries, this state does not contain the largest reserves. The centre of coal production must surely continue to move westward toward the geographic centre of the nation's coal reserves, which was figured several years ago as situated in southeastern Nebraska—a state, by the way, of low rank both in coal output and coal reserves.

Petroleum and natural gas in their distribution in some degree supplement coal. While the states of the Appalachian and Lima-Indiana petroleum fields are mostly coal-bearing states as well, the largest oil-field, both in present production and probable reserve, is in California, a state with only negligible coal resources. Taken together, these mineral fuels constitute a national asset comparable with the coal resources of this country, but the larger part of the value of the natural gas, petroleum, and coal to the nation is in their relation to manufactures.

The wide distribution of the other items in the nation's treasury is no less notable than their abundance. Taking, for instance, the ores of the six important metals, the lack of localization can be seen in the record of last year's production by states. Listing the three leading producers for each of these six metals, we find no less than 13 states, including Alaska, in the competition. Missouri is the only state to rank first for two metals, lead and zinc. Montana stands second in both copper and silver, Colorado ranks second in gold and third in zinc, while Utah stands third in the production of three metals, copper, silver, and lead. These mining districts that are so productive of mineral wealth are scattered over the country from Alaska, ranking third in gold, to Alabama, third in iron ore, and from California, which leads in gold, to New Jersey, second in zinc. A wide distribution like this of ores sufficiently rich and extensive to be mined in large quantities means that the metallurgical industry is important on both the Pacific and Atlantic seaboard, and in most of the Rocky Mountain states as well as in several of the middle states.

Even in the two metals which at once suggest to us centralization—copper and steel—there is widespread production. In the mining of copper last year, 23 states contributed, and the mining of iron ore is not confined to any one region, even though the ranges of Minnesota and Michigan furnished 84% of the tonnage and Alabama and Tennessee 8½%. In all, no less than 28 states contribute iron ores to the furnaces of the country.

The diversity of the mineral industry is shown by the increase in number of products. Thus, while in 1880 the statistics of production covered fifty-one products, the table of production in current reports contains no less than seventy-two items. Furthermore, when the rapid growth of the industry is analyzed, the more marked increase is seen in that of the non-metallic products. The old opinion that the word 'mineral' carried the idea of 'metallic' is overwhelmed by the relative importance of the non-metallic mineral products. In 1880 these constituted 47% of the total output, and last year more than 63%. Another method of stating this relative importance is that the value of the non-metals last year was greater than that of both metals and non-metals in any years prior to 1905.

The raw material resources of this country are so widely distributed that industry has been developing at this rapid pace at many points. I believe the tendency has been away from geographic centralization of industry rather than toward it. The state of Pennsylvania stands in a class by itself as a producer of mineral, yet its pre-eminence is perhaps less marked each year. Although last year its output was more than one-fourth of that of the whole country, a few years ago its share was more nearly one-third. Other factors are coming to the front each year which will create opportunities in other parts of the United States. You do not need to have these more than suggested: the South with its happy combination of coal and iron ore in the same districts makes pig iron production possible at minimum cost; the West, with its hydro-electric possibilities available as a source of relatively cheap power for chemical and metallurgical industries; the Rocky Mountain region, with its vast unutilized sources of sulphuric acid and equally great unmined stores of phosphate rock.

In these months of rapidly shifting currents of trade we may see even coals carried to Newcastle, but I will not presume to tell industrial chemists anything concerning possibilities of American manufacture of

Generated on 2024-09-30 00:50 GMT / https://hdl.handle.net/2027/uiug.30112007838169
Public Domain, Google-digitized / http://www.hathitrust.org/access_use#pd-google
Digitized by Google
Original from UNIVERSITY OF ILLINOIS AT URBANA-CHAMPAIGN

coal-tar products, so essential to other industries. However, it is not apart from the present subject to mention the amount and distribution of raw material available. Of the 115,000,000 gallons of coal tar annually produced in by-product coke ovens, more than 22,000,000 is available in Alabama alone, nearly as much in Pennsylvania, 16,000,000 in the Indiana and Illinois region, nearly half that in western New York; and Ohio, West Virginia, Maryland, Kentucky, Wisconsin, and Michigan are other important producers. Yet so far as I am informed, few indeed are the centres where coal tar is used as a basis for chemical industry.

To return for a moment to the industrial reaction mentioned in my introductory sentence—the other ingredients necessary for producing prosperity appear at hand. A financial system already promises more mobile credits. A more sympathetic attitude of the public toward big industrial operations is indicated. The efficiency of American labor and American engineering was never mentioned.

Two years ago, William L. Saunders, president of the Ingersoll-Rand Company, gave his fellow mining engineers the benefit of his personal observations on manufacturing in Asia and Europe. His conclusions are of value to all engineers. He stated that manufacturing centres are not determined by abundance of cheap labor; efficient labor and the best tools are the requisites to manufacturing supremacy; the cheap labor in a Japanese steel works does not yield the low labor items on the cost sheet attained by the American manufacturers with high-priced labor; and finally, the real competition with American industry is that of the efficiency of German workmen, enforced as it is by inventive engineering, rather than that of the cheapness of Asiatic labor.

In any estimate of American ability to make the most of the present opportunities for industrial expansion, you can perhaps find no better measure of the inventive genius of this country than in a moment's review of what is making the European war so terrible. Strictly neutral may we be, yet from the heights above to the depths below we find American inventions 'at the front'—the aeroplane, the magazine rifle and machine gun, the barbed wire, and the submarine and its torpedo. Cannot our nation lead as well in fashioning the tools of peace as in designing the machines of war?

The New South Mountain Oilfield, Ventura County, California

By DORSEY HAGER*

In June 1913 the writer was called upon to examine some property south of Santa Paula, California. After a preliminary survey, it was evident from the data at hand that the district was favorable to the accumulation of petroleum.

On the strength of these data, some land was secured, the South Mountain Oil Company was organized, and in November 1913 a test-hole was started. In July 1914

FIG. 1. SOUTH MOUNTAIN FIELD, SHOWING SURFACE INDICATIONS.

oil was struck at less than 1500 ft. in the test-hole, a conclusive answer to those who predicted failure.

Two years before the writer's visit to the district, the Oak Ridge Oil Company drilled a test-hole to a depth of 2200 ft., more or less, without striking petroleum, though some gas was encountered. This hole was considered a test of the district by many oil men, though the Oak Ridge people did not feel such to be the case, as is evidenced by their having paid cash

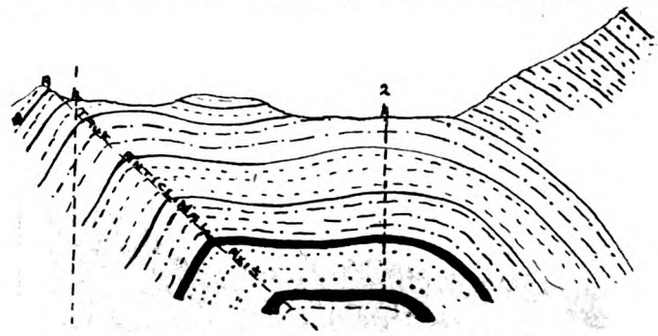

FIG. 2. UNDERGROUND STRUCTURE OF FIELD.

rentals on the land, even after the failure of their test bore.

The reasons for the South Mountain success and the Oak Ridge failure are interesting and instructive, besides showing the value of applied geology. Superficially the geology indicates that the Oak Ridge hole is several hundred feet north of a well defined anticlinal axis. However, the true conditions are very different. Fig. 1 gives a very good idea of surface indications. Fig. 2 gives the underground structures. This cross-section must not be considered as anything but a generalization of the main geologic features.

It will be noted in studying Fig. 2 that the Oak

*Geological Engineer, Tulsa, Oklahoma.

Generated on 2024-09-30 00:45 GMT / https://hdl.handle.net/2027/uiug.30112007838169
Public Domain, Google-digitized / http://www.hathitrust.org/access_use#pd-google
Digitized by Google
Original from UNIVERSITY OF ILLINOIS AT URBANA-CHAMPAIGN

Ridge hole at Location 1 is in reality south of the true anticlinal axis which lies at A and pitches to the south. The anticline is a broad flat-topped asymmetrical structure with two minor folds on it. These minor folds intersect at a point east of the South Mountain well and merge into one fold.

As shown in Fig. 2, the Oak Ridge hole is too far north on the anticline to tap the lower productive strata, which change in dip very rapidly. This condition was worked out theoretically before commencing drilling on the South Mountain property, and recent developments have proved the correctness of the theory. A few brief notes on the geology may prove of interest.

LOOKING EAST AT SOUTH MOUNTAIN LOCATION.

Geologic Structure

The South Mountain well is situated on a dome or 'structural high' on the main South Mountain-Oak Ridge anticline. The productive wells of the Union Oil Company at Grimes cañon, and the splendid holdings of the Montebello and Calumet Oil companies at Shields cañon, are also on domes along the same anticline. The nearest wells on the anticline are those of the Union Oil Company at Grimes cañon, 10 miles east of the South Mountain well.

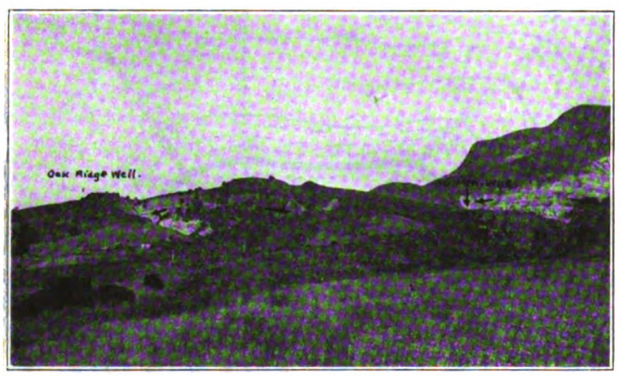

ANOTHER VIEW OF FIELD.

The South Mountain dome drains a very large territory; in fact, one of the largest of southern California.

Faulting

Several minor faults occur on the south flank of the anticline. It is not believed that these faults are of sufficient magnitude to affect the accumulation of petroleum, as in all likelihood they disappear with depth.

On the north flank of the anticline along the Santa Clara river there has been faulting of magnitude. North of the river Upper Fernando beds of the Pliocene period are shown, while on the south, Vaqueros beds of the Lower Miocene period are prominently exposed. The valley of the Santa Clara follows the fault line.

Stratigraphy

The geologic formations involved in this district are as follows:

Period.	Formation.	Characteristics.
Recent	Alluvial deposits	Sands, gravels, clays, silts.
Pliocene Upper Miocene	Fernando	Light colored sand, sandstones, conglomerates, and shales.
Middle Miocene	Monterey	Silicified shales, massive sandstones at base. Carries petroleum.
Lower Miocene	Vaqueros	Greenish shales banded with red and pink. Massive buff colored sandstones; no oil.
Oligocene Eocene	Upper Sespe Lower Sespe	Red and pink shales, light colored sandstones; brown and blue sandy shales. Carries oil sands throughout. No fossils.
Eocene	Lower Sespe	Brown sandstones, hard blue shales.

The Sespe formations have been very productive throughout the Santa Clara region. The Union Oil Co. wells at Grimes cañon and those of the Montebello Oil Co. at Shield's cañon derive their oil from the same formations.

Petroleum Indications

There are no live petroleum bearing sands outcropping on the South Mountain Oil Co.'s holdings. A few yellow stained sands show evidence of having carried petroleum, but it is not thought that it will pay to test these sands.

In drilling the South Mountain well, a number of sands carrying oil and gas have been encountered. A 'dry' gas stratum was encountered above the lower sands. The gas from the oil is of excellent quality and will be used for 'casing-head' gasoline. The petroleum itself is of light gravity, testing better than 27° Baumé.

Conclusion

The principal inducements to prospecting in the South Mountain district were the well marked anticlinal and dome conditions, and the presence of the Sespe formations, productive throughout the Santa Clara region. Drilling operations were commenced solely upon the geologic evidence, a convincing proof of the value of applied science.

Generated on 2024-09-30 00:46 GMT / https://hdl.handle.net/2027/uiug.30112007838169
Public Domain, Google-digitized / http://www.hathitrust.org/access_use#pd-google
Digitized by Google
Original from UNIVERSITY OF ILLINOIS AT URBANA-CHAMPAIGN

Grades and Excavations for Road Construction*

By A. D. WILLIAMS†

In the past two or three years stress has been laid upon the subject of permanent roads. Many articles have been written bearing upon the various kinds of surfaces, but the ever important subject of grade and excavation has received only passing notice. Yet the only permanent thing about a road is its grade and location. The various kinds of surface will yield to the actions of the elements and pass the march of time, but the road once established will become more fixed as the years go by, adding improvements and new property lines to bind it firmly in place. This makes more important the engineering subject of our roads. The establishment of grades and location should be given the greatest consideration.

The Minimum Grade

The principal factor entering into the determination of a minimum grade is the question of sufficient drainage. Except on fills over 2 ft., the minimum grade should not be less than three-tenths (0.3) of 1%, and preferably not less than five-tenths (0.5) of 1 per cent.

The Maximum Grade

There are a number of factors that enter into the maximum grade, but before attempting to locate any road or to establish any grade, the engineer should make a thorough study of the territory to be developed by the proposed road, giving due consideration to the following points:

1. What will be the present and future demands of the territory adjacent to the proposed improvement.

2. What are the possible developments in the territory from an industrial, agricultural, educational, and social standpoint.

3. What part will the proposed road be of a general system of roads reaching to other communities, and what will be the effect of the improvement on other sections.

4. The nature of traffic that the road will be called upon to take care of, making due allowance for development, considering the present and future tonnage.

5. The general direction in which the greatest amount of tonnage will be transported, the class of tonnage, and the time necessary to move it in order to make it the most marketable.

6. The direction in which the ascending grade will be in comparison with the possible traffic demands.

7. The maximum load that a horse can pull based upon the length of grade and the time required to make the trip, from the standpoint of the horse and the time necessary to get the best results for the kind of material the country will produce.

8. Consideration should always be given to climatic conditions and to the season that the roads will be required to take care of the heaviest traffic, as well as a study of the foothold for horse-drawn vehicles. The possible amount of frozen or icy weather should be noted in determining a maximum grade.

9. The class of material over which the road is to be made and the cost of construction on the longer distance compared with the steeper grade and shorter distance have a certain bearing upon the subject, because the most important subject in connection with the cost of roads on grades is that of maintenance, which increases very rapidly with the increase of grade. Roughly speaking, the destructive effect of violent and periodical storms is four times as great on a 5% as on a level ground, and nine times as severe on a 10% as on level grade. Thus if no other factors were to be considered on earth roads alone, the cost of upkeep in a very few years would justify the elimination of bad grades.

10. The condition of the right-of-way and the possible chances for disposition of water and drainage are factors of much importance when considering the maximum grade, because on steeper grades the increasing velocity demands more drainage and greater skill in handling the water, which, if kept on or near the road, will soon destroy it.

11. The consideration of a grade from the ascension is not the only angle of approach in the location of highway grades because important items enter into the descending grade that should be given as much, if not more, consideration than the ascending direction.

12. A grade should not be steeper than a horse can descend safely in a trot.

13. A grade should not be steeper than a team can safely descend with a load that it can handle for ten hours under normal conditions, exerting its normal tractive force.

14. The amount of time necessary to descend a grade should be considered, making due allowance for the maximum speed that can safely be used on that grade.

15. The highway engineer of today must remember that, as time passes, the motor traffic requirements of the public highway will be more and more exacting. Experiments as to gasoline consumption and its efficiency on difficult grades and materials are now being conducted near Uniontown, Pennsylvania, by R. O. Gill, experimental engineer for the Chalmers Motor Co. of Detroit, Michigan. In this connection we have but little data. Some recent experiments made by H. Kerr

*Read at Fourth American Road Congress, Atlanta, Georgia, November 9 to 14, 1914.

†Chief Road Engineer, State of West Virginia.

Generated on 2024-09-30 00:47 GMT / https://hdl.handle.net/2027/uiug.30112007838169
Public Domain, Google-digitized / http://www.hathitrust.org/access_use#pd-google
Digitized by Google
Original from UNIVERSITY OF ILLINOIS AT URBANA-CHAMPAIGN

Thomas and D. Ferguson, of Buffalo, New York, for the Pierce-Arrow Motor Co., show that the class and kind of surface exert more influence upon the motor-driven truck than the percentage of grade, and that it requires practically the same tractive force on a 1% grade in sand and loose stone to handle the same load as it does on a 27% grade on concrete, asphalt, new brick, and first-class macadam. But observations of the writer led to the conclusion that grades of any length exceeding 5 or 6% are not as satisfactory and as economical as lighter grades for motor traffic, owing to the increased hazard, increased consumption of gasoline, and loss of power due to the resistance to gravity. The writer's observation further concludes that in frozen or icy weather motor traffic is extremely hazardous on grades exceeding 10%, and entirely unsafe on grades exceeding 16 per cent.

16. Grades crossing a summit should merge into each other by some form of vertical curve.

By reference to Gillespie, whose work contains about all we have upon tractive power of a horse, which embraces the experiments of Sir John McNeil, Sir Henry Parnell, and Mr. Cayffier, some of whose works are quoted by nearly every writer, we find that a horse traveling at the rate of 2½ miles per hour can exert 10% of his weight, and traveling at the rate of 4 miles per hour can exert 6% of his weight. These observations, prior to 1850 and just before the advent of the steam road into our field of engineering, embrace about all the experiments we have, excepting the work of E. B. McCormick, of the Kansas State Agricultural College, and the works of J. H. Waters of the University of Missouri; and other work by Mr. McCormick is now being done for the Office of Public Roads, at Washington. The writer's personal observations have shown that a horse for a limited period can exert one-fourth and sometimes even greater percentage of his weight, this depending in a measure upon the kind of shoes on the horse and the foothold on the grade. A horse on a road material that offers safe footing can be safely trotted down a 5% grade, but cannot be trotted down so heavy a grade for any great length of time without injury by 'jamming or stoving him up.' Therefore, the ruling grade should not exceed 5% if for a horse-drawn vehicle over which speed must be made on the descending grade, because the average horse in walking down a grade will not make over 4 miles per hour, while he will trot 12 miles per hour; thus, from this standpoint, we can double the distance of the road and increase the time 33⅓%. The speed of 12 miles per hour should not be undertaken down a grade of more than 3% with a vehicle bearing any kind of a load. In ascending a 5% grade, the capacity of the team is about four-tenths of its capacity on level ground. But a point here that should not be forgotten is that for a short duration a horse can exert from 25 to 40% of his weight, thus doubling and quadrupling its normal tractive force; and in this connection it is often economy, considering the financial condition of the community, to put in a short piece of 6 and even 7% grade, than to expend a large amount of money in making an exhaustive and expensive cut, especially so if the cut must be made at the expense of development in some other part of the community. One thing that should be borne in mind is that each year's development of our country makes the chances for changing of grades and their elimination less possible, and that while the improvement of the surface of a road increases its tractive efficiency about 200% on level ground, the latter is increased only about one-fourth for a horse-drawn vehicle on a 10% grade; thus money expended in decreasing the grade within a reasonable amount of distance is the best possible investment.

Then with these conclusions drawn and a decision as to the kind of surface that will possibly be placed upon the road at some future time, we are in a position to determine what should be the maximum grade.

Economic Considerations

The economic phases of highways and highway construction are many. We might say in studying the history of highways and highway economics that it can be divided into three periods: The Roman or Ancient Road, the Telford and MacAdam period, extending from 1750 to about 1840, and our modern or twentieth century awakening. The Roman road with its 3 ft. of stone was reduced about one-half in the days of Telford and MacAdam, and now with modern machinery we are constructing macadamized roads in West Virginia at costs ranging from $1000 to $4000 per mile, concrete from $7500 to $12,000 per mile, and brick from $9000 to $20,000 per mile. It should be borne in mind, that the cross-section of a road should be such as to permit the greater portion of the work to be done by machinery on ground where machinery can be operated, and that an extra width of the road on hillsides increases the cost. A road on hillsides should not be wider than is needed to care for the traffic. In country districts a 9-ft. concrete bituminous or brick or a 10-ft. macadam with 5 ft. of earth on each berm will meet all requirements.

On ground free from roots and stone, where a road machine can be used, the material can be moved at a cost of less than 5c. per yard, and on hillside grading where the work is casting, a small steam-shovel is an economical machine to use. With this should go a drilling outfit and attachments so it can be operated with the same power. Barbour county, West Virginia, this season purchased a tractor and heavy grader for each district, equipped them with drilling outfit, and with less money than they expended in 1913, they have graded nearly all of the roads of the county in good shape.

Methods and Costs of Grading and Excavating

This is a machine age and wherever grading can be done by machinery it is usually more economical. The following table, based upon figures taken from

Generated on 2024-09-30 00:47 GMT / https://hdl.handle.net/2027/uiug.30112007838169
Public Domain, Google-digitized / http://www.hathitrust.org/access_use#pd-google
Digitized by Google
Original from UNIVERSITY OF ILLINOIS AT URBANA-CHAMPAIGN

different pieces of work, is approximately correct to a wage scale of 15c. per hour and capable supervision:

By a glance at the figures it will be seen that at 22c. per yard, or at the same cost for any given ratio, the ratio cost distances are, for wheelbarrow, 400 ft.; drag scraper, 400 ft.; wheel scrapers, 500 and 600 ft.; one-horse cart, 1500 ft.; wagon, 1800 ft.; while tractor and truck on track do not reach the amount within one mile. The cost of grading depends materially upon the class of material, the location, and the management of the operation. In McDowell county, West Virginia, a contractor failed on a contract at 65c. per cubic yard for a material running about 60% soft sandstone rock and 40% earth. The county purchased a steam-shovel and moved the material at a cost of 19c. including explosives, drilling, and shooting. This was casting work on a heavy hillside grade. Thus the contract price to the county was $13,000 for 20,000 yards. The cost of the labor and explosives, and upkeep of the machine, was $3800. The cost of the machine, including drill and compressor, was $5500; or a total of $9300 including the cost of the machine, leaving the county a profit of $3700 in cash and the equipment.

In Marion county, West Virginia, a contractor recently contracted for a piece of work unclassified at 46c., and the work cost 52c.; this was done by steam-shovel, being about 70% rock and 30% earth.

In Pleasants county, West Virginia, material running about 80% rock and 20% earth costs 83c. per cubic yard to grade by day labor at 20c. per hour, teams at $3.50 per day. On the same piece of work with prison labor on the honor system, which costs 75c. per day, and teams at $3.50 per day, the grading costs 30c. per cubic yard.

In Kanawha county, West Virginia, the Atlantic Bitulithic Co. has a contract for 3 miles of road grading and surfacing. The grading is contracted at $1.25 for stone and 34c. for earth classifications running about 70% and 30% earth, or an average of 97.7c. per yard. The state has a prison camp working on the honor system under a competent engineer, and is moving the same class of material at 24c. per cubic yard.

Then, as to methods, the writer would suggest the use of machinery wherever possible under competent supervision and under proper direction, and to make use of the state and county prison labor. On work that is light, and on which machinery can be employed, the work should be done by day labor. On heavier work and large quantities, the writer would recommend contracting, and to the contractor a systematic organization of his work so as to get the most efficient service from his men and equipment. There are volumes written covering the subject of cost data in heavier work, but the writer's experience in highway work leads to the conclusion that there are many elements entering into the cost of highway construction that are often overlooked when comparing this class of work with heavier work. One point of deficiency that has been noticeable and should be emphasized here is the lack of organization in highway construction in the various sections of the country. In many instances 50% of the cost could be saved by an adequate organization.

In conclusion, I want to say that the most economical thing a community can do is to improve its roads so as to serve all its demands, and to do this, it should employ a competent highway engineer to make a careful study of the needs of the territory, its financial ability to construct and maintain a road and to locate and superintend the construction of their road for them. When the road is constructed a competent patrolman should be placed on it to continually keep up the maintenance and repairs. Many of our paths and by-ways were not located by men or by engineers, but were the foot-prints of the primitive mound builders, the buffalo, the deer and the wild animal that wandered to

Picking, 5c.; plowing, 2c., steam plowing, 1.5c. per cu. yd. Hauling by wagon, approximately 35c. per cu. yd. Hauling by trucks and tram, 14c. per cubic yard.

Distance hauled, feet.	Comparative cost per cubic yard for moving earth with: Wheel-barrow.	Drag or slide scraper.	No. 1 wheel scraper.	No. 2 wheel scraper.	One-horse cart.	Wagon.	Tractor and trucks.	Grader.	Casting over bank.
100	$0.057	$0.090	$0.100	$0.100	$0.056	$0.095	$0.080	$0.022	....
200	0.114	0.135	0.130	0.125	0.068	0.103	0.080	....	....
300	0.170	0.180	0.160	0.150	0.080	0.111	0.080	....	....
400	0.230	0.225	0.190	0.175	0.090	0.119	0.080	....	....
500	0.285	0.270	0.220	0.200	0.101	0.127	0.080	....	....
600	0.342	0.315	0.250	0.225	0.112	0.135	0.080	....	....
800	0.457	0.405	0.310	0.275	0.135	0.151	0.080	....	....
1000	0.570	0.495	0.370	0.325	0.160	0.167	0.090	....	....
1500	0.857	0.720	0.520	0.450	0.214	0.207	0.090	....	....
2000	1.143	0.945	0.670	0.575	0.271	0.247	0.100	....	....
3000	1.713	1.395	0.970	0.825	0.388	0.327	0.100	....	....
4000	2.280	1.845	1.270	1.075	0.500	0.407	0.100	....	....
Loading by Hand									
	0.050	0.010	0.010	0.010	0.130	0.130	....	....	$0.100
Loading by Steam-Shovel									
	....	....	....	....	0.060	0.060	....	....	0.060

Generated on 2024-09-30 00:50 GMT / https://hdl.handle.net/2027/uiug.30112007838169
Public Domain, Google-digitized / http://www.hathitrust.org/access_use#pd-google
Digitized by Google
Original from UNIVERSITY OF ILLINOIS AT URBANA-CHAMPAIGN

and fro in the wildwood. Thus our roads need revising because

One day through the primeval wood,
A calf walked home, as good calves should;
But made a trail all bent askew,
A crooked trail as all calves do.
Since then two hundred years have fled,
And, I infer the calf is dead.
And from that day o'er hill and glade
Through those old woods a path was made;
And many men wound in and out,
And dodged and turned, and bent about
And uttered words of righteous wrath
Because 'twas such a crooked path.
This forest path became a lane,
That bent, and turned, and turned again;
This crooked lane became a road,
Where many a poor horse with his load
Toiled on beneath the burning sun,
And traveled some three miles in one.
And thus, a century and a half
Trod in the footsteps of that calf.
The years passed on in swiftness fleet,
The road became a village street;
And this, before men were aware,
A city's crowded thoroughfare.

And soon the central street was this
Of a renowned metropolis.
And men two centuries and a half
Trod in the footsteps of that calf.
Each day a hundred thousand rout
Followed the zigzag calf about;
And o'er this crooked journey went
The traffic of a continent.
A hundred thousand men were led
By one calf near three centuries dead.
They followed still his crooked way,
And lost one hundred years a day;
On some roads the first engineer
Was a wild beast or fleeting deer.
Road Builders, be sure when you laugh,
That you're not trailing a calf.
For such a reverence is lent
To such established precedent,
That men are prone to go it blind
Along the calf paths of the mind,
And work away from sun to sun
To do what other men have done.
They follow in the beaten track,
And out, and in, and forth, and back,
And still their devious course pursue,
To keep the path that others do.
But how the wise old wood gods laugh
Who saw the first primeval calf.
Ah! many things this tale might teach,
But I am not ordained to preach.

EFFECT OF CREOSOTE ON YELLOW PINE AND CEDAR PILES

The recent dismantling of the Santa Fe railway bridge across Galveston bay gave an opportunity to study the relative serviceability of untreated, inadequately treated, and thoroughly treated piles in southern waters. For the first bridge, built in 1875, creosoted piles were used, but the amount and character of the creosote, as well as the amount of previous seasoning, are unknown. In 1895 the trestle was reconstructed, the piles being treated according to the best practice of that period. Many of the piles of the original trestle were left standing between the bents of the new structure. When the causeway was started in 1909, increasing temporarily the demands upon the old bridge, it was decided that some reinforcements were needed for the trestle, and some untreated pine piling was put in. When the old structure was dismantled last summer it was found that the thoroughly treated pil s were almost all in good condition; that, while the majority of those lightly treated in 1875 were almost completely eaten away from mud-line to water-line, a few were still in good condition, and that the untreated piles were practically destroyed.

The data regarding the treatment given the original piles thirty-eight years before their removal are very meagre. On removal it was found that the air sections had lost almost all outward signs of having been treated. While the hearts were in many cases badly decayed, the outsides were sound. In other cases, even where no more than half of the stick had been penetrated, both heart and outside were in good condition.

The piles driven in 1895 when removed were found to be in good condition, at least 90% being fit for use elsewhere. Most of these piles were penetrated throughout with the preservative, and in no instance was there any sharp division line between the treated and untreated portion of the stick.

The oil used in the piles treated in 1895 was what was then known as 'heavy oil,' not on account of its high specific gravity, but because at ordinary temperatures it contains a large percentage of solid matter. Among the piles treated in 1895 were 110 of red cedar. These were found on removal to have been attacked only slightly in spite of the difficulty of injecting a large amount of oil into this timber.

The effects of borers on the untreated pine piles driven in 1909 for the purpose of reinforcing the old structure were very severe, many of the piles being completely eaten through by limnoria, with evidences also of the teredo.

While the borers attacked treated piles also, it is noted that in many instances where the treated piles have been attacked the borers have entered through knots. Most of the 1895 piles that have so suffered are very resinous. It is difficult to force oil into knots or resinous pieces of timber, and from the analyses made, it is thought that the pieces that were attacked received less than the average amount of oil on account of their refractory character. Untreated piles examined indicated that the knots were less attacked than the softer wood around them, hence the resistance of knotty and resinous piles to all penetration is to blame, rather than the structure of the wood itself, for the vulnerability of this class of timber.—*Electric Railway Journal.*

Generated on 2024-09-30 00:44 GMT / https://hdl.handle.net/2027/uiug.30112007838169
Public Domain, Google-digitized / http://www.hathitrust.org/access_use#pd-google
Digitized by Google
Original from UNIVERSITY OF ILLINOIS AT URBANA-CHAMPAIGN

Filtration Plant and Fresh-Water Supply for the P. P. I. E.

By ARTHUR A. WILLOUGHBY

The fresh-water supply system in use on the grounds of the Panama-Pacific International Exposition is designed to provide for an estimated maximum demand of 1,500,000 gal. per day, but it may easily be increased should occasion arise. The Exposition will operate its own pumping plant, situated in the vicinity of Fulton street and Forty-seventh avenue near Golden Gate park. Arrangements have been concluded for the use of a portion of a large reservoir situated in the Presidio, for storage and pressure purposes.

While the water from the wells was found to be normally pure, tests made showed that during the rainy season certain undesirable qualities might be present, and it was decided as a precautionary measure to install a filtration plant of the rapid sand-filter type. The filter is designed for a capacity of 1,500,000 gal. per 24 hours, with a total of three units. A fourth unit will be added later if required. It will be one of the few privately owned and operated plants in the United States and embodies some new ideas in filter construction.

Source of Supply

There are five vertical-drilled wells, ranging from 75 to 80 ft. deep, lined with a 16-in. inner casing and an outer casing 20 in. diameter, with a gravel filling between. There is, in addition, a sump 14 ft. wide, 30 ft. deep, and 200 ft. long, and lined with 3-in. sheet piling. Inside the sump have been placed 100 8-mesh wire screens in special removable cast iron frames. Krogh vertical turbine pumps belted to 15-hp. electric motors are used at the wells, and a pump of the same type is operated at the sump by a 10-hp. motor. The discharge pipe from the wells to the sump is 8 in. diameter, while the pipe from the sump to the filtration plant is 6 inches.

Construction of Filter

Owing to the fact that the plant is only intended for use during the Exposition period, heavy timber framing was used. The type and sizes of framing used are as follows: inside width of each unit, 12 ft. 6 in.; length, 14 ft. 8 in.; height, 7 ft. 6 in.; side posts, 2 pieces, 3 by 8 in., spaced 4 ft. apart and braced with 2 by 6-in. braces; lining, 3 by 12-in. planking; cracks battened with ½ by 4-in. battens over burlap and Bermuda pitch; flume structure rests on 6 by 12-in. stringers, resting on 6 by 8-in. mudsills, and these in their turn are placed on 3 by 12-in. planking resting on the ground.

The measuring chamber into which the discharge pipe empties is 9 ft. 6 in. long. Above this chamber is the coagulant house where the sulphate of alumina is mixed and discharged in the proper quantities into the water. The water will also be given a sterilizing treatment of hypochlorite of lime. From the measuring chamber, the water is admitted through two submerged orifices into the raw water flume which is 64 ft. long and of the same construction as the measuring chamber. The extreme length allows a sufficient period for the coagulant to take effect. At the farther end of the raw water flume, is a small supply flume, 2 ft. wide and 4 ft. deep, which runs between the filter units. Water is admitted to the filter units from this frame through shear gates.

The rate of filtration is estimated at 2 gal. per sq. ft. sand area per minute. The bottom of the filter is composed of 20 in. of assorted gravel, ranging in size from 2½ in. at the bottom, to gravel which will be retained on a 12-mesh screen. Above this is 27 in. of filter sand, the exact nature of which has not been determined, but it will have an effective size of about 0.36 mm. and a uniformity coefficient of 1.4. Above the sand layers, allowance is made for a depth of water of 34 in., leaving a freeboard of 9 in. to the top of the flume, making 7½ ft. in all.

At the bottom of the filter across the shortest width and resting on the flooring under the gravel layer, is located a steel header of special taper design. From this header, pipes 2½ in. diameter and 14 ft. long, spaced 6 in. between centres, run lengthwise of the filter. On the underside of these pipes are drilled $\frac{5}{16}$-in. holes, 3 in. apart. The object of the header and the lateral pipe system is to act as a collector of the water or the 'effluent,' as it is termed, after it has been filtered by passing through the sand layers. From each header an 8-in. effluent pipe takes the filtered water to a clear-water reservoir situated at a lower elevation and about 120 ft. distant from the filters. These effluent pipes each terminate in an effluent controller, the object of the controller being to maintain a constant rate of filtration through the sand. This is an especially designed controller and is operated by means of a float. Each controller is placed in a special compartment from which the water flows through a submerged orifice into the clear-water reservoir. The reservoir is of standard flume framing and is 96 ft. long.

A short distance from the clear-water reservoir is the main pumping plant which pumps the filtered water through a 12-in., lap-welded, dresser joint pipe, a distance of 19,300 ft. to the Presidio reservoir, which has an elevation of 365 ft. above the pumping plant. The pumping plant is approximately 31 ft. 6 in. by 33 ft. 8 in. and has walls 8 ft. high. The equipment consists of three 6-in. 5-stage Krogh pumps belted to 125-hp. electric motors. The total capacity of the three pumps is slightly in excess of 2,500,000 gal. per 24 hours.

Generated on 2024-09-30 00:45 GMT / https://hdl.handle.net/2027/uiug.30112007838169
Public Domain, Google-digitized / http://www.hathitrust.org/access_use#pd-google
Digitized by Google
Original from UNIVERSITY OF ILLINOIS AT URBANA-CHAMPAIGN

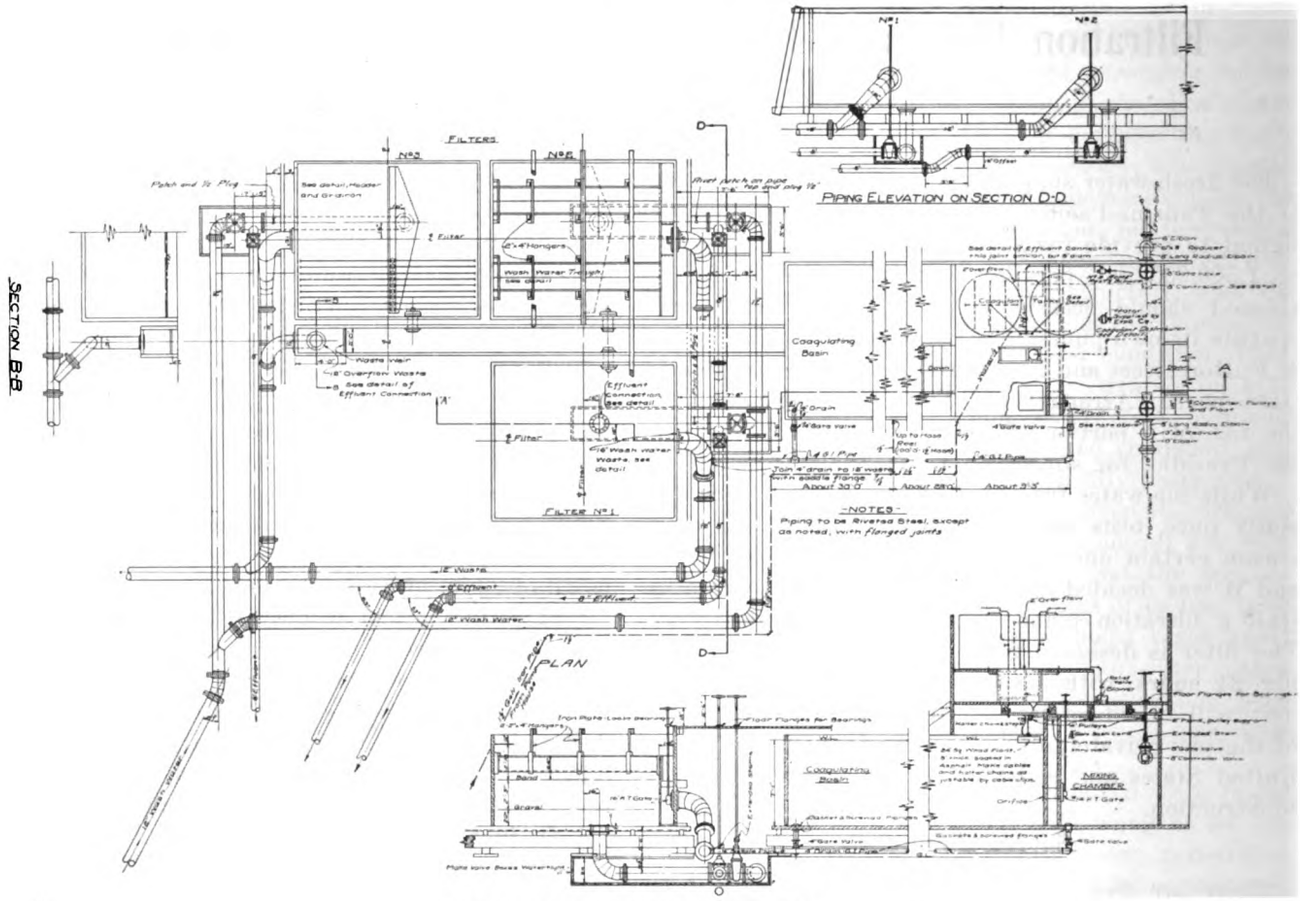

GENERAL VIEW OF THE FILTER PLANT.

Coagulant Mixing Chambers

The coagulant mixing chambers consist of two circular redwood tanks, 5 ft. diameter and 4 ft. high. On the side of each tank is a semi-circular compartment, in the bottom of which is an 8-mesh galvanized iron screen. This compartment contains the sulphate of alumina crystals, which are dissolved by water being sprayed over them by a distributer and making a liquid solution in the tanks. The water for the distributer is supplied through a pressure reducing valve and a 1½-in. pipe from the main pipe-line. From these tanks the dosing solution passes by gravity through a 1½-in. pipe to an orifice box 12 in. wide, 24 in. high, and 36 in. long, situated in front of the mixing tanks. From this orifice box the coagulant solution flows through hard rubber circular orifices into an iron funnel, thence through a pipe to a pipe distributer which supplies the coagulant to the raw water after the water is discharged from the pumps into the measuring chambers. The quantity of the coagulant required depends on the amount of water being discharged into the measuring chamber from the pumps. This quantity is automatically controlled by regulation of the head in the orifice box. This is accomplished through differential floats which raise or lower the ball cock mechanism and which vary the height of the solution in the orifice box in proportion to the difference in height of water between the measuring chamber and the raw water flume, thus making the head in the orifice box proportional to the quantity of flow of water from the measuring chamber to the raw water flume. This was especially designed to suit the particular conditions under which this plant operates, and so far as known is the only one in use.

The solution in the mixing tanks is kept stirred by means of a small Root blower, run by a ½-hp. motor. Similar equipment is used for the sterilizing treatment. A 1-in. pipe runs from the blower to the bottom of the mixing tanks and terminates in a ¾-in. pipe distributer, having $\frac{1}{16}$-in. holes drilled on the underside, spaced 6 in. apart. All piping which comes in contact with the coagulant solution is galvanized and all valves are of brass.

Wash System

The wash system is one which has recently come into use, the old type of air agitation having been abandoned and a high velocity wash water system used. The wash water stirs and cleanses the sand at one operation and requires a shorter period of time for washing, less wash water, and, it is estimated, will give a more thorough washing. The velocity of the wash water will be approximately 15 gal. per sq. ft. sand area per minute. This water is taken from the clear-water reservoir and pumped by means of a 10-in Krogh centrifugal pump through a 12-in. pipe. The wash water is collected in the filters by means of two V-shaped wood troughs, 14 in. deep and 28 in. wide across

Generated on 2024-09-30 00:45 GMT / https://hdl.handle.net/2027/uiug.30112007838169
Public Domain, Google-digitized / http://www.hathitrust.org/access_use#pd-google
Digitized by Google
Original from UNIVERSITY OF ILLINOIS AT URBANA-CHAMPAIGN

the top. The top edges of the trough are 2 ft. above the top of the sand in the filters, the water flowing over the edges of the troughs and being collected through a 16-in. shear gate which will discharge the water into a 12-in. drain pipe running to a slough in the park about 150 ft. distant from the filters. The overflow and drain pipes from the various flumes connect to this drain.

Fire protection for the plant is afforded through a 2-in. pipe and a pressure reducing valve on the main pipe-line. Hose racks have been provided at convenient points.

Effluent Controllers

The effluent controllers consist of special castings having two 7-in. outlets, one at the top and the other at the bottom. In the closed position the outlets are filled by means of a plunger and two pistons. The plunger is worked by a walking beam which terminates in a wood float, the float mechanism resting in a special box with perforated sides to prevent any agitation of the surface water affecting the operation of the float. An auxiliary float in the clear water reservoir connects with an extension of the walking beam. The function of this float is to close the controller and shut down the filters when the maximum water level is reached in the reservoir.

Distributing System

The Presidio reservoir, which has a capacity of 6,000,000 gal., is concrete lined and is divided into two compartments by a concrete bulkhead. The Exposition will have the use of one compartment, giving a storage capacity of 3,000,000 gallons. A gravity pipe-line runs from the reservoir to the distributing system in the Exposition grounds, which occupy a considerably lower elevation. The pipe-line is supplied with a surge tank and pressure reducing valves. The distributing system is made up of 4, 6, 8, 10, and 12-in. National pipe and equipped with hydrants having 3-in. standard San Francisco outlets and approximately 400 ft. apart. The system which parallels the high-pressure fire protection system, is designed also as an auxiliary system in cases of emergency and the motor pumping engines of the fire department can connect to these hydrants and draw on the fresh-water supply if necessary.

The filtration plant has been designed under the direction of Guy L. Bayley, chief electrical mechanical engineer for the Exposition. E. C. Eaton is assistant manager in charge of the design and construction. Charles Gilman Hyde, of the University of California, was retained as consulting engineer.

Electric traction has just been introduced on the Turin and Savona railway, for passenger traffic only, on the section of the line across the Apennines between the latter town and Coval, a distance of 29 miles. This section, which is the heaviest part of the line, includes the Belbo tunnel, about three miles in length, with maximum gradients of 1 in 40. The maximum speed is 31 miles per hour.

Hints on Practice

POWER-PUMP TROUBLES

Many times troubles develop in power pumps which are difficult to locate. Probably the greatest source of trouble is in the valves, which become worn and uneven, and if they turn slightly on the stem the port opening is not properly closed, and excessive slip results. Other causes of valve trouble are sticks, leaves, and rubbish clogging the seats or blocking up the valves. Valve stems sometimes work loose and drop out, and the valves that do not fit properly become wedged or stuck.

Some difficulty is experienced in lifting water by suction, which may be due to various causes. The pump and the suction line should be well primed before starting, and for long or high suction lifts a foot valve of a large valve area should be provided.

All air pockets should be carefully avoided in the suction line, and pumps which are so designed as to form air pockets in the suction-valve chamber should be avoided. Plunger or piston and piston-rod packing should be of good quality and properly installed. In installing a pump it should not be forgotten that pipe friction is to be overcome in the suction as well as in the discharge line; therefore, the pipe-lines should be kept free from sharp bends.

Air in the suction line will cause pounding. Hence all leaks should be repaired, and it should be seen that the suction pipe is properly submerged at the intake.

Long suction lines will sometimes knock from the momentum of the column of water which must be started and stopped. A suction or vacuum chamber to cushion the shock will remedy the trouble. Hot water will evaporate in a vacuum and cause a severe knock if lifted by suction. Therefore, the water should be brought to the pump under a slight head if possible.

As worn crank or pinion shaft bearings will vary the shaft centres and cause noisy gears, the gearing should be properly lined up and the centres properly adjusted and the bearings rebabbitted. Cast gears may have one or two large teeth in the gear or pinion which will cause a noise at each revolution. Filing down to a proper size will remove the noise.

Single pumps, and even duplex and triplex pumps, will occasionally develop pounding in the discharge line. The cause may be a fluctuating discharge, which may be remedied by a discharge air chamber, proper care being taken that it is supplied with air. Faulty check valves in the discharge line, improper arrangement of piping or frequent opening and closing of the discharge valve, may cause knocks.

Every power pump should be fitted with one or more relief valves placed close to the pump to prevent breakage. A check valve in the discharge line will take the load from the pump-discharge valves during a shut-down.—G. H. Bridges in *Power*.

DUSTLESS CONCRETE FLOORS

By spreading dry cement and sand over burlap laid on the wearing surface coat of concrete immediately after it is struck off, sufficient moisture is removed to produce a dustless floor. Up to the time of applying the burlap, standard specifications are followed. The dry mixture similar to that used for the wearing coarse is spread lightly on the burlap and distributed with a wood rake to a depth of ½ inch. Capillary attraction abstracts the excess of water in from 20 to 30 min., as much as 25 or 30% of the water from the underlying surface being taken up in this way. The mixture is then lifted by the burlap and dumped into the mixing box for the next batch. The surface of the floor is in perfect grade and ready for

Generated on 2024-09-30 00:51 GMT / https://hdl.handle.net/2027/uiug.30112007838169
Public Domain, Google-digitized / http://www.hathitrust.org/access_use#pd-google
Digitized by Google
Original from UNIVERSITY OF ILLINOIS AT URBANA-CHAMPAIGN

final finishing by wood float or trowel. At this period the whole body of the concrete topping is so stiff that no impression is made by walking over the surface or in working on the surface in the subsequent manipulations.

Owing to the excess of water necessary for the successful manipulation of the mortar used in the wearing course, considerable time usually elapses before the surface becomes stiff enough for troweling, since this surplus water must either evaporate or be taken up by the concrete base on which the top is placed. With a concrete sidewalk the wearing course is usually placed on an absorptive base which takes care of the excess water used in the mixing. In case the surface is applied directly to a reinforced-concrete floor which has previously hardened, there is no opportunity for disposition of this excess water. The same holds true when the top is placed on a rich wet concrete similar to that used in reinforced work. The result is that in the interval which elapses while the excess water is disappearing, the cement partly hardens and the late troweling has a tendency to break up the crystals formed. Further than this, any troweling has a tendency to bring up the excess water to the surface, forming a film of what is sometimes termed 'drowned' cement. When wear takes place sebsequently, this surface film is the first to scale off, leaving a sandy finish which is subject to excessive abrasion, particularly on account of its own rough surface.

A number of floors of considerable area finished by this method have been in place for two or three years, and at present concrete floors in several buildings of the Chicago Telephone Co. in and around Chicago are now being laid according to the above procedure by the P. M. Bruner Granitoid Co., of St. Louis, who control the process.—*Engineering Record.*

Industrial Progress

LARGE GAS-ENGINE FOR FERRY SERVICE

The largest single-unit distillate or gas engine ever constructed was recently completed by the Union Gas Engine Co. of San Francisco for the Oakland, Antioch & Eastern Railway. The engine is 600-hp. and is installed on the car ferry *Ramon*, which transfers electric trains across the Sacramento river from Mallard island to Chipps island. It is set amidships, and is coupled to a propeller at each end of the boat by means of friction clutches. The two propellers are of opposite pitch, thus allowing the direction of the boat to be controlled by engaging either one clutch or the other, eliminating the necessity for reverse gearing.

The engine is of the open cross-head type, has eight cylinders, and operates at a normal speed of 210 r.p.m. Its approximate weight is 90,000 lb., and the length over thrust blocks, 45 ft. The cylinders are cast separately, and are of the open cross-head type, the lower part being cut away to form guides. These openings give access to the connecting rod brass, and also allow a positive oil feed to be fitted to the piston pin,

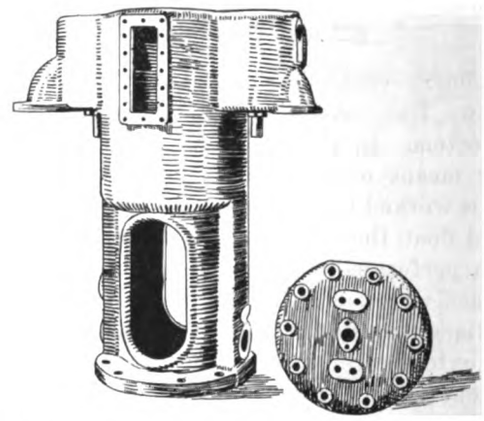

CYLINDER, SHOWING CROSS-HEAD CONSTRUCTION.

which feed is in connection with a force feed oiling system. The piston is unusually long and has openings in the side to correspond with those in the cylinder. The piston pin is placed below these openings, and the circulation of air induced by the pumping action of the piston has a decided cooling effect on the upper connecting rod brasses and on the upper end of the piston itself. It is well known that with internal combustion engines of large diameters, one of the principal difficulties to be overcome is the proper cooling of the piston. In this case the difficulty is met by the open cross-head design, by which the piston and pin are cooled without the complications resulting from the circulation of water through the moving member. The cylinders have valves on opposite sides operated by plungers and tappets off separate camshafts.

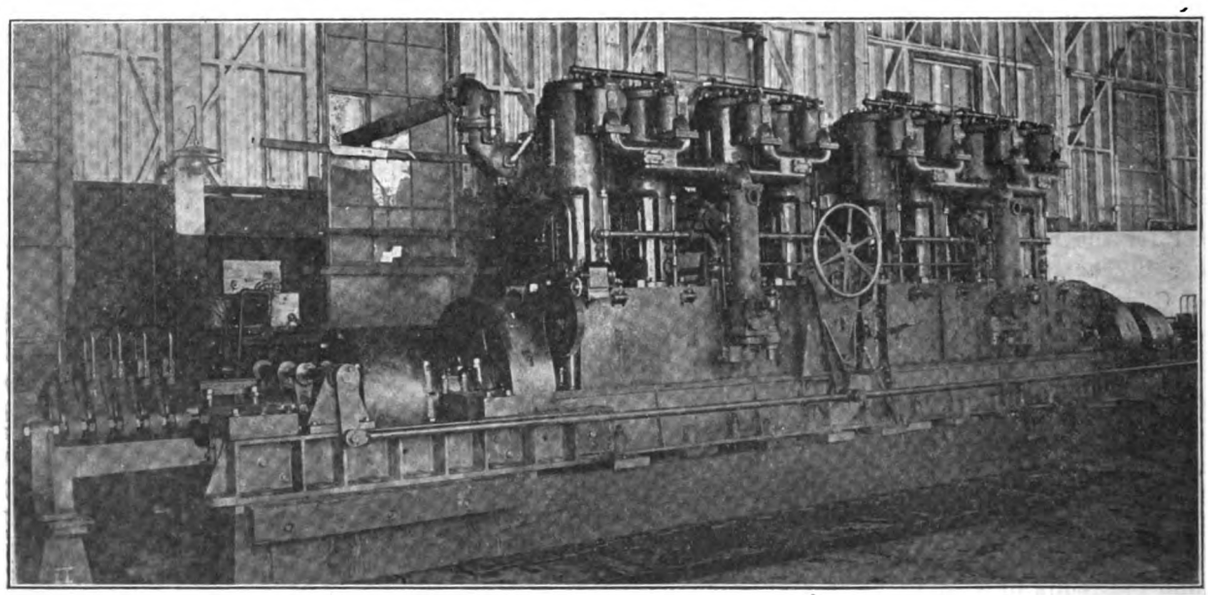

VIEW OF ENGINE INSTALLED IN COMPANY'S TESTING ROOM.

Generated on 2024-09-30 00:47 GMT / https://hdl.handle.net/2027/uiug.30112007838169
Public Domain, Google-digitized / http://www.hathitrust.org/access_use#pd-google
Digitized by Google
Original from UNIVERSITY OF ILLINOIS AT URBANA-CHAMPAIGN

Starting is accomplished by means of compressed air delivered to four cylinders through a distributing valve. Lubrication is effected by four mechanical force-feed oilers positively driven from the camshaft. From these lubricators separate oil pipes lead to all the principal working parts, the pumps being capable of delivering oil against a pressure of 80. lb. The crankpin bearings are lubricated by means of a centrifugal oil ring fastened to the crank web and connecting with oil holes leading out to the centre of the crankpin. The inlet and exhaust valve mechanism is so arranged that the side thrust of each cam is taken up by a valve lifter lever and roller of special design. The exhaust valves are water cooled.

In addition to the main engine, an auxiliary engine of 20 hp. is situated at one end of the engine room. This engine is coupled to a generator for supplying current for the ship's lights and for lighting cars in transit. It is also arranged to drive an air-compressor and bilge pump.

Instead of the comparatively large number of men needed in the engine-room in the case of a steam engine, only one engineer is needed. The greatest saving, as compared with steam power, is the elimination of fuel expense while the vessel is tied up between runs.

RESULTS OF TEST OF 225-HP. DIESEL ENGINE

Tests of considerable importance were made recently upon a 225-hp. engine manufactured by the Busch-Sulzer Bros.-Diesel Engine Co. The engine is at the plant of the Hugo Ice & Light Co. at Hpgo, Oklahoma, and the tests were conducted under the direction of A. C. Scott, president of the Scott Consulting Engineering Co., Dallas, Texas. The plant consists of a type A, 225-b.hp., 3-cylinder, 4-stroke cycle, single-acting Diesel engine running at 164 r.p.m.; one separate 3-stage air-compressor, supplying starting and fuel injection high-pressure air, and belt driven from a 25-hp. motor; one Fort Wayne 200-kva., 3-phase, 60-cycle, 2300-volt generator, direct connected to the engine; and one 10-kw. exciter with a speed of 850 r.p.m., belt driven from the engine shaft. A view of the engine is shown in Fig. 2.

When the tests were made, the engine had been running about six months, but it was decided upon examination that no adjustments were necessary before proceeding with the tests. In ordinary use the power for the motor which runs the compressor is supplied from the generator, but during the tests, power from an outside source was used, in order to obtain a maximum of accuracy in the determination of power delivered. Readings of the electrical horse-power consumed by the motor were taken simultaneously with the other readings, and a corresponding deduction made from the kilowatt output of the generator. A slight error was introduced by this method, due to the fact that transmission losses are higher for a motor-generator system than for a belt, so that the actual efficiency of the engine would be slightly higher than that computed from the tests.

The fuel for the tests was that regularly used by the Company, and cost $1.22 per barrel of 42 gallons. The following

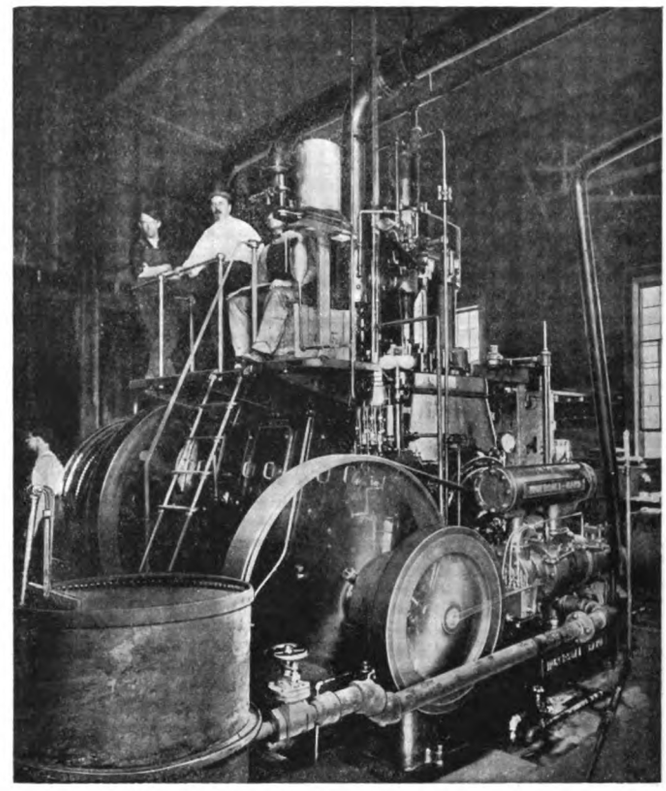

FIG. 2. VIEW OF ENGINE.

analysis was made by H. W. Harper and J. R. Bailey of the University of Texas.

B.t.u. per pound	18,986
Specific gravity (25.5 to 27°C.)	0.8531*
Viscosity at 33.3°C	1.63
Flash point, degrees Fahrenheit	144
Fire test, degrees Fahrenheit	181
Sulphur, per cent	0.2
Water	trace
Free acid	none

*Corresponding to about 33° Baumé at 62° Fahrenheit.

The first series of tests was for steady loads ranging from no load up to 13% overload. The results are summarized as follows:

Tests.	1.	2.	3.	4.	5.	6.
Duration, hours	3.00	3.00	3.00	3.00	3.00	3.00
Kilowatt switchboard reading	....	37.42	80.23	117.25	160.00	180.10
Air-compressor motor, gross kilowatts	6.30	6.90	9.09	9.38	9.70	11.40
Net output in kilowatts	....	30.52	71.14	107.87	150.30	168.70
Load, per cent	3.50	26.00	52.00	75.00	102.00	113.00
Efficiency of generator, per cent	....	85.00	87.00	90.00	92.00	92.50
Net brake horse-power	8.05	58.25	116.70	168.80	228.50	254.00
Speed, revolutions per minute	171.10	169.10	167.40	164.40	164.80	161.90
Cooling water, in pounds per hour	2187.00	3037.00	4875.00	6300.00	4537.00	5175.00
Jacket inlet temperature, degrees Fahrenheit	61.80	62.40	61.90	62.60	61.70	66.70
Jacket outlet temperature, degrees Fahrenheit	115.30	127.90	115.50	118.90	156.60	173.10
Injection air, pressure-atmospheres	39.00	45.60	56.00	59.00	66.00	77.00
Fuel oil, pounds per net kilowatt-hour	....	1.255	0.757	0.674	0.642	0.645
Fuel oil, pounds per net brake horse-power hour	2.760	0.657	0.461	0.431	0.422	0.428
Cost of fuel, cents per net kilowatt hour, at $1.22 per barrel	....	0.51	0.31	0.28	0.26	0.26
Fuel oil, gallons per 100 net brake horse-power hour	....	9.27	6.49	6.07	5.94	6.04
Thermo-dynamic efficiency (based upon net useful ouput)	....	20.50	29.10	31.10	31.70	31.30

Generated on 2024-09-30 00:47 GMT / https://hdl.handle.net/2027/uiug.30112007838169
Public Domain, Google-digitized / http://www.hathitrust.org/access_use#pd-google
Digitized by Google
Original from UNIVERSITY OF ILLINOIS AT URBANA-CHAMPAIGN

The fuel consumption per net brake horse-power hour is shown graphically in Fig. 1.

Analyses of samples of the exhaust gases taken for each test showed complete combustion of the fuel. The number of British thermal units carried away in the cooling water ranged

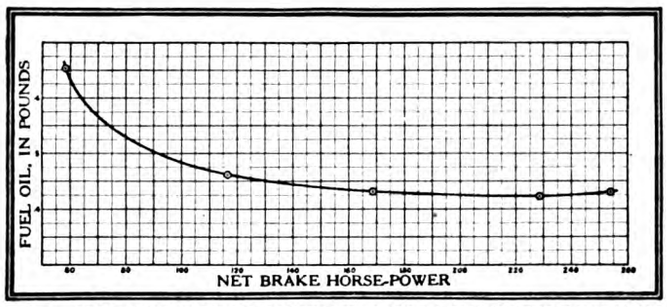

FIG. 1. FUEL CONSUMPTION, CONSTANT LOADS IN POUNDS PER B.H.P. HOUR

between 2000 and 2200 per brake horse-power hour for load conditions between one-half load and 13% overload.

A series of tests for varying loads was carried out as follows. The engine was started with a load of 36.2 kw., which at the end of the first 30-minute period had been gradually

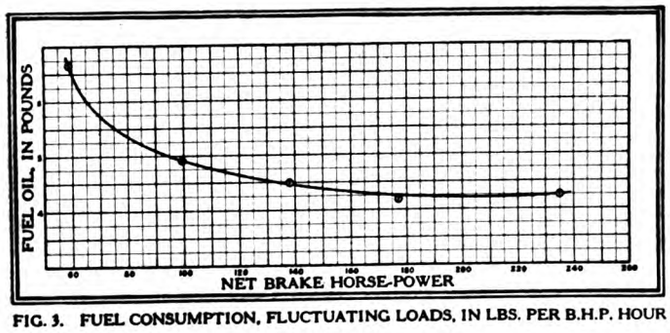

FIG. 3. FUEL CONSUMPTION, FLUCTUATING LOADS, IN LBS. PER B.H.P. HOUR

increased to 62.4 kw. Similar load increases were made during each succeeding 30-minute interval, until a load of 170.4 kw. was reached. The fuel consumption per brake horse-power is shown graphically in Fig. 3. A comparison with the results shown in Fig. 1 indicates that for ordinary loads the fuel economy for varying and for steady loads is practically the same.

Book Reviews

AMERICAN SEWERAGE PRACTICE. In three volumes. Volume I, DESIGN OF SEWERS. By Leonard Metcalf and Harrison P. Eddy. P. 721. Index. McGraw Hill Book Co., New York. For sale by *Mining Press*, San Francisco. Price, $5.

This is the first volume of what is probably the pioneer among really exhaustive treatises on the subject. The second volume will deal with the construction of sewerage systems, and the third with the design of works for the treatment and disposal of sewage. In the present volume, after a brief review of the history of the subject, and of the general arrangement of sewerage systems, there is a summary of data concerning the laws governing the flow of water and also its measurement. Then the computation of the probable amount of flow in sewers is considered, first, the quantity of sewage itself, and then the quantity of storm-water. The various formulae for the computation of the latter are discussed, as well as methods of gaging the actual flow in a given sewer. After considering the different kinds of sewer pipe, the structural design of large sewers is taken up in detail. Manholes, siphons, and other accessories are reviewed, and the last chapter of the volume is devoted to sewage pumping stations. A minor feature of the book, but one that will be greatly appreciated by the reader, is a page in the index, by which, given the number of any table or illustration, the corresponding page in the book may be found.

GRAPHICAL DETERMINATION OF SAGS AND STRESSES FOR OVERHEAD LINE CONSTRUCTION. By Guido and Marco Samenza. Translated from the Italian by C. O. Mailloux. P. 24. McGraw-Hill Book Co., New York. For sale by *Mining Press*, San Francisco. Price, $3.

The problem of determining the stresses during storms in overhead electrical construction due to the combined action of wind, ice, and cold, is so complex that its solution is seldom attempted except in the case of the more expensive high-tension transmission lines. In most other cases, the determination of the proper amount of sag to allow is largely a matter of guesswork. The authors have prepared a series of charts by which the stress and sag in a line may be found for any given conditions without going through a long computation. The text gives directions for the use of the charts, a theoretical discussion of the formulae used, and some general information concerning the proper allowance to be made for wind and ice loads in various localities.

MATERIALS OF MACHINES. By Albert W. Smith, P. 203. Index. John Wiley & Sons, New York. For sale by *Mining Press*, San Francisco. Price, $1.25.

Professor Smith's book has been rewritten for the second edition and much new matter has been included. Fuels are first discussed, followed by a consideration of the electric furnace. Refractory materials are then taken up. Then follows an outline of the metallurgy of iron and steel, including a description of the blast-furnace, the bessemer process, and the open-hearth process. A brief outline of the metallurgy of the other principal structural metals follows. Methods of testing materials are then described. A chapter is devoted to the equilibrium diagram of iron and carbon, following which, cast iron, steel, and the non-ferrous alloys are taken up in detail. The last chapter will assist the student in the practical application of what has gone before, giving as it does, a discussion of the qualities required for some parts of common machines, and showing the reason for the choice of material usually made.

MACHINE SHOP PRACTICE. By William J. Kaup. P. 193. Index. John Wiley & Sons, New York. For sale by *Mining Press*, San Francisco. Price, $1.25.

The aim of the writer is stated to be to show the 'why' rather than the 'how' of the common shop processes, nevertheless both objects are attained in considerable measure. The various machine shop operations from simple chipping in a vise up to work on a milling machine are considered. After each operation is described, a summary is given of the important points to be learned therefrom. Other parts of the book discuss materials of construction, measuring instruments, abrasives, and grinding, and tool steel and tempering. Gear cutting and design are also briefly treated. An appendix is devoted to shop operations. The use of the book requires merely an elementary knowledge of arithmetic and trigonometry, and is a work suitable either as a school text-book or shop manual.

MECHANISM OF THE STEAM ENGINE. By Walter H. James and Myron W. Dole. P. 165. Index. John Wiley & Sons, New York. For sale by *Mining Press*, San Francisco. Price, $2.

The authors have purposely confined themselves to the mechanical side of the subject and have made no attempt to dis-

Generated on 2024-09-30 00:52 GMT / https://hdl.handle.net/2027/uiug.30112007838169
Public Domain, Google-digitized / http://www.hathitrust.org/access_use#pd-google
Digitized by Google
Original from UNIVERSITY OF ILLINOIS AT URBANA-CHAMPAIGN

cuss the physical properties of steam, or, indeed, its properties at all, except as a force acting in certain ways on the working parts of a steam engine. By so doing, they have been able to cover the general features of the mechanical side of the subject in a small volume. After devoting a chapter to a general discussion of the reciprocating engine, single and multiple valves and valve diagrams are considered, together with automatic governing devices. Then follows a discussion of hand-controlled gears. Valve setting is taken up, and a number of indicator diagrams showing the results of faulty valve setting are given. The last two chapters are devoted to turbines and their valve mechanism and governing.

THE CEMENTATION OF IRON AND STEEL. By Dr. Federico Gioletti. Translated from the Italian by Joseph W. Richards and Charles A. Rouiller. P. 399. Index. McGraw-Hill Book Co., New York. For sale by *Mining Press*, San Francisco.

Every blacksmith or machinist and almost every engineer is more or less familiar with the ordinary processes of case hardening and also with the making of crucible and similar kinds of steel. Very few even among engineers, however, are acquainted with the progress that has been made in the scientific theory of these processes during the past few years. The first part of the present treatise takes up in order the work of the various investigators of the laws governing cementation and closes with a summary of the present state of the science. In Part II the author considers the industrial applications of the process of cementation, taking up, first, the present practice in the production by cementation of a steel which shall be hard throughout, and followed by a discussion of partial cementation, or case hardening, with solid, liquid, gaseous, and mixed cements. The thermal treatment of cemented products is considered and also the proper methods for the control of the cementation. The last chapter gives a summary of the principal patents concerning cementation processes. The book is well illustrated and much of the data is presented graphically by means of diagrams and charts.

Recent Publications

U. S. Bureau of Mines Publications:

THE HUMIDITY OF MINE AIR, WITH SPECIAL REFERENCE TO COAL MINES IN ILLINOIS. By R. Y. Williams. *Bulletin* 83. P. 69. Illustrated.

A STUDY OF THE OXIDATION OF COAL. By H. C. Porter and O. C. Ralston. *Technical Paper* 65. P. 30. Illustrated.

PRODUCTION OF EXPLOSIVES IN THE UNITED STATES DURING THE CALENDAR YEAR 1913. By A. H. Fay. *Technical Paper* 84. P. 13.

QUARRY ACCIDENTS IN THE UNITED STATES DURING THE CALENDAR YEAR 1913. By A. H. Fay. *Technical Paper* 93. P. 66.

HINTS ON COAL MINE VENTILATION. By J. J. Rutledge. *Miners Circular* 16. P. 22.

THE PREVENTION OF ACCIDENTS FROM EXPLOSIVES IN METAL MINES. By Edward Higgins. *Miners Circular* 19. P. 16. Illustrated.

PROGRESS IN THE CLASSIFICATION AND UTILIZATION OF THE PUBLIC LANDS. From March 4, 1913, to June 30, 1914. Extract from the annual report of the Secretary of the Interior for the fiscal year ended June 30, 1914.

THE EXPLOSIBILITY OF GRAIN DUSTS. A preliminary report by David J. Price and Harold H. Brown. Co-operative investigation by Millers' Committee of Buffalo, New York, under the direction of Dr. George A. Hulett, chief chemist of the U. S. Bureau of Mines, Pittsburgh, Pennsylvania. P. 59. Illustrated.

THERMAL PROPERTIES OF STEAM. By G. A. Goodenough. *Bulletin* No. 75, Engineering Experiment Station, University of Illinois, Urbana, Illinois. P. 69. Ill. Price 35c.

GOOD ROAD DAYS. *Economic Paper* No. 35. North Carolina Geological and Economic Survey. Joseph Hyde Pratt, Director, Raleigh, North Carolina.

GATE STRUCTURES FOR IRRIGATION CANALS. By Fred C. Scobey. *Bulletin* No. 115. U. S. Department of Agriculture. P. 61. Illustrated.

CONSTRUCTION, INSPECTION, AND CERTIFICATES. By Charles F. Wieland, consulting engineer, Claus Spreckels Bdg., San Francisco. P. 11.

U. S. Geological Survey publications, Washington, D. C., 1914:

CONTRIBUTIONS TO THE STRATIGRAPHY OF SOUTHWESTERN COLORADO. By Whitman Cross and E. S. Larsen. *Professional Paper* 90-E. P. 12. Illustrated.

A RECONNAISSANCE IN THE CANYON RANGE, WEST-CENTRAL UTAH. By G. F. Loughlin. *Professional Paper* 90-F. P. 10. Illustrated.

THE MONTANA GROUP OF NORTHWESTERN MONTANA. By E. Stebinger. *Professional Paper* 90-G. P. 8. Illustrated.

Engineers' Note Book

The following formulae, from *Engineering News*, are prescribed by the recent building regulations of Philadelphia, Pennsylvania, for figuring flat slabs of reinforced concrete:

METHOD OF FIGURING FLAT-SLAB CONSTRUCTION
DROP CONSTRUCTION

L = C. to c. of columns of the longest of straight bands in inches.
L_1 = Edge to edge of capital head in inches.
w = Total dead and live load per square foot.
d = Distance in inches from centre of gravity of centroid to centre of steel at the drop.
d_1 = Distance in inches from centre of gravity of centroid to centre of steel at the centre of slab.
If drop construction is not used, $d = d_1$.
Sufficient depth of slab to be provided for shearing stresses as well as bending stresses.
Capital head = not less than $^2/_{10}\ L$.
Width of drop = $^{35}/_{100}\ L$.
Width of bands = $^5/_{10}\ L$.
$-M$ = Moment at edge of capital head.
$+M$ = Moment at centre of span.

$$\text{Load carried by straight band} = \frac{\text{total bay} - \text{capital head}}{2} \times w.$$

$$-M = \frac{\text{total bay} - \text{capital head}}{2} \times \frac{wL_1}{12}$$

$$+M = \frac{\text{total bay} - \text{capital head}}{2} \times \frac{wL_1}{24}$$

Width of concrete to resist compression at edge of capital head = width of drop.
Width of concrete to resist compression when negative moment $= -\frac{wL_1}{24}$ = width of band + $3T$ (T = thickness of slab).
Width of concrete to resist compression in centre of span = width of band + $6T$.

Steel: $$\frac{-M}{d \times 16{,}000} = x$$

Place 66% of x in straight band } over capital head.
Place 34% of x in diagonal band }

$$\frac{+M}{d_1 \times 16{,}000} = x_1$$

Place 66% of x_1 in straight band } in centre.
Place 34% of x_1 in diagonal band }

For 2-way reinforcement over capital head the amount of steel in straight band = x.

Generated on 2024-09-30 00:44 GMT / https://hdl.handle.net/2027/uiug.30112007838169
Public Domain, Google-digitized / http://www.hathitrust.org/access_use#pd-google
Digitized by Google
Original from UNIVERSITY OF ILLINOIS AT URBANA-CHAMPAIGN

Construction News Summary

Condensed From Our Daily Construction News Service.

CALIFORNIA

ALAMEDA—Electric Railway & Manufacturers' Supply Co., 84 Second street, San Francisco, was low bidder at $5044.81 for furnishing weather-proof wire to city.——Council has passed resolution for widening and improving Encinal avenue east of Park avenue.——City engineer is preparing plans for extension and improvement of Atlantic avenue.

ALBANY—Bonds for $9000 for schools were defeated.

ANAHEIM—Charles and Joseph Carroll will erect brick building costing $8000.——Storm water protection district has been organized. Joseph Fiscus, Max Nebelung, and W. Pannier have been elected directors.——Herbert S. Heineman, San Fernando building, Los Angeles, has been awarded contract for three-story brick building costing $15,000.——W. H. Houts has been awarded contract for installing 59 ornamental lighting standards.

AUBURN—Bonds for $45,000 for grammar school have been sold to the W. R. Staats Co., San Francisco. Trustees will spend $1100 on street improvements.

BAKERSFIELD—Castro & Blaisdell have been awarded contract for construction of bridges and culverts on the McKittrick road for $12,973.25.——George S. Benson & Sons, Stimson building, Los Angeles, have been awarded contract for construction of 11.6 miles of Taft road for $45,998.55.——Building Trades Council is considering erection of labor temple. J. C. Harter is business agent.——M. T. Kean has been awarded contract for erection of Knights of Pythias temple for $10,995.——Thompson Bros., Fresno, have been awarded contract for paving, gutters, and curbing on eight blocks of alleys in the business district.——W. J. Gobin has been awarded contract for sewers in district No. 23 at $2439.

BANNING—Contract for school building has been awarded to R. D. McLain, Riverside, at $1500.

BLYTHE—Contracts for grading railroad to Palo Verde valley about 40 miles will be let during February. J. M. Neeland, Los Angeles Investment building, Los Angeles, is interested.

CALEXICO—Carnegie library, costing $25,000, will be erected. D. A. Leonard is member of committee.——Contract for erection of high school has been awarded to Robinson & Davis, El Centro, for $45,750.77.

CASTELLA—California & Oregon Power Co. will extend power line to Coffee Creek district.

CHICO—Residents of Vecino region are considering formation of a sanitary district.

COLTON—J. E. Harper will erect business block on I street.

CORNING—Bonds for $30,000 for extension of water and sewer system were voted.

CUPERTINO—Citizens and Peninsular Electric railroad will share cost of new concrete depot.

DINUBA—All bids for sewer work on Tulare street have been rejected, and work will be done by day labor.

DIXON—Contract for construction of high school building has been awarded to Boyd, Kerr & McLean, San Francisco, for $56,000.

EAGLE ROCK—J. C. Booth has been awarded contract for laying cement walk on Sycamore avenue at 11½c. per square foot.

EAST SAN DIEGO—Olaf Nelson, San Diego, has been awarded contract for improving Sisson avenue and other streets for $32,734.27.

EL CENTRO—F. H. Olmsted, Hollingsworth building, Los Angeles, is preparing plans for sewer system.——Z. L. Parmelee Co., Long Beach, has been awarded contract for electric work on Barbara Worth hotel for $3285.——Supervisors and City of Holtville will share cost of 100-ft. reinforced concrete bridge across Alamo river at Sixth street, Holtville. Cost about $6000.

ESCONDIDO—Contract for drilling wells for municipal water system has been awarded to W. W. Young. Contract for casing for wells has been awarded to Valley Sheet Metal Works.

EUREKA—About $575,000 will be spent on jetty work, commencing about February 1. Morton L. Tower is engineer.——Eureka Paving Co. has been awarded contract for grading high school grounds for $1711.——City engineer G. A. Strand is preparing plans for septic tank for city sewage.

FORT BIDWELL—R. R. Rice and others are considering installing gas plants here and at Eagleville.

FRESNO—Robert Dalziel, Jr., 218 First street, San Francisco, has been awarded contract for heating system for Webster school for $4148.——E. M. Prescott has presented plan to city trustees to erect private garbage incinerator at a cost of about $60,000 and take a contract for disposal of refuse for a period of years.——California Road & Street Improvement Co. has been awarded contract for paving K street from Inyo to Isabella.——City engineer Cronkhite has prepared plans for emergency hospital and garage costing $4000.——Sidewalks on R street between Kern and Ventura have been ordered.——Council has adopted plans for concrete bridge over Dry creek at Coast avenue.——R. F. Felchin is preparing plans for two-story steel and brick building to be erected on site of Fulton hotel, recently burned.

GLENDALE—Mesmer & Rice, 230 Marsh-Strong building, Los Angeles, have been awarded contract for erection of 72-ft. steel bridge and approaches at $28,200.——C. W. Kent & Son, 431 Brad boulevard, have been awarded contract for construction of brick addition to city hall at $4200, also for erection of brick buildings on Central avenue at $4600, and for brick addition to Third Street school for $6350.

GRIDLEY—Trustees are considering paving main streets of town under Vrooman act.——Property owners in this vicinity are considering the formation of a drainage district. Don C. Robb is interested.

HANFORD—L. R. Adell will build concrete pipe factory on West 8th street.——City Council is considering purchase of about 1200 ft. of 4-in. water pipe to replace worn-out pipe.——Supervisors have granted petition of F. E. Robinson, S. Richardson, and others for formation of new reclamation district from 819 acres in Lovelace district.

HOLTVILLE—Hoagland-Lakin Electrical & Engineering Co., 1707 Naud street, Los Angeles, has been awarded contract for heating and ventilating for grammar school building for $4390.——Nance & Phelps, Ninth street and Central avenue, Los Angeles, were awarded contract for construction of grammar school at $32,000.

HUENEME—Hueneme Wharf & Warehouse Co. will rebuild wharf carried away by recent storm.

HUNTINGTON BEACH—Huntington Beach Water Co. is considering the installation of additional pumping machinery.

INGLEWOOD—Parish hall of hollow tile construction will be erected for Church of the Holy Faith. Frohman & Martin, 302 Slavin building, Pasadena, are architects.

JACKSON—J. T. Whittlesey, Claus Spreckels building, San Francisco, is making surveys for dam and irrigation system at Volcano lake.

KINGSBURG—Election will be held February 13 to vote on bond issue of $40,000 for high school building.

LAKEPORT—Board of Supervisors has passed resolutions favoring construction of branch of state highway from Capay to Lower Lake.

LINCOLN—Contract for additions to sewer system has been awarded to Frank McIntyre, Stockton, for $2636.

LONG BEACH—W. H. Austin, Elm and Ocean avenues, is preparing plans for brick building for W. P. Wilson costing $20,000.——Long Beach Brick Co. has been awarded contract for brick and concrete work on armory building for $2500. J. D. Sherrer, carpentry work at $1200.——Homer Laughlin will erect two-story brick building. I. J. Gill, 913 South Figueroa street, Los Angeles, is architect.——P. E. Morey will erect two-story building costing $7500. F. L. Lindsay, 17 Locust avenue, is architect.——J. D. Therieau will erect brick building costing $15,000. W. H. Austin, 26 Elm avenue, is architect.——Trounce & Stoecker, San Fernando building, Los Angeles, will construct reinforced concrete pier costing $46,000.——Following contracts for cement sidewalks and curbs have been awarded: To H. L. Frazer, 29 Orange street, work on Eliot and on 6th street; to J. Driskill, 539 Coronado avenue, work on Florida street; to J. H. Shafer, work on 4th and on New York street and on Orizaba avenue.

LOS GATOS—City clerk will advertise bids for motor-driven combination fire apparatus.

LOS ANGELES—H. S. Heinemann, San Fernando building, has been awarded contract for erection of three-story brick building at Anaheim for J. E. Fisher, costing $15,000.——C. W. Shafer, 220 West 33rd street, has been awarded contract for improving McFarland street at $9351.96.——R. A. Merrill, 1804 Roosevelt avenue, has been awarded contract for improving 2nd avenue at $2764.35.——Fairchild-Gilmore-Wilton Co., Pacific Electric building, has been awarded contract at $8999.70 for improving Union avenue, and at $7778.10 for improving Serrano avenue.——H. R. Boynton Co., 216 N. Los Angeles street, will erect warehouse and pipe shed on Bay street.——L. S. Hibbard, 722 Marsh-Strong building, is preparing plans for citrus experimental buildings for University of California to be erected at Riverside. Cost about $125,000.——Alta Planing Mill Co., 830 McGarry street, has been awarded contract for constructing hollow tile partitions in city hall offices at $3195.——A. Graham & Son, 1525 W. 29th street, have been awarded contract for brick building for R. Livingstone at $6500.——Harbor engineer Jubb is preparing plans for widening Mormon Island channel

Generated on 2024-09-30 00:48 GMT / https://hdl.handle.net/2027/uiug.30112007838169
Public Domain, Google-digitized / http://www.hathitrust.org/access_use#pd-google
Digitized by Google
Original from UNIVERSITY OF ILLINOIS AT URBANA-CHAMPAIGN

to 500 ft.——Harbor Commission has decided to dredge east channel west of municipal dock No. 1 to depth of 35 ft. Cost about $50,000.——Fairchild-Gilmore-Wilton Co. has been awarded contract for street improvements in Wilhart Street district at $27,921.——Bryant & Austin, 1650 Compton avenue, have been awarded contract for improvement of Vermont avenue for $127,764.16.——George H. Oswald, O. T. Johnson building, has been awarded contract for improving Hoover street for $48,525.59.—Fairchild-Gilmore-Wilton Co. has been awarded contract for paving and curbing on Avenue 26.——Harbor Commission will construct harbor northeasterly from Dead Man's island, for fishermen. Cost about $300,000.——Baker Iron Works, 912 N. Broadway, has been awarded contract for equipment of municipal asphalt plant for $6749.——S. A. Jubb, assistant harbor engineer, has prepared plans for 6-story reinforced concrete warehouse, costing $350,000, for dock No. 1.——O. L. Stevens has been awarded contract for improving alley near Hoover street for $1334.82.——Joe Chutuk has been awarded contract for sewer on Fifth avenue at $367.90, and for sewer on Fourth avenue at $777.90.——John Cholovich has been awarded contract for sewer in Curson avenue for $569.——City Engineer Hamlin has prepared plans for storm drain in district bounded by 4th street, Boyle avenue, 7th street, and Los Angeles river. Cost $27,016.——Johns-Manville Co., 222 N. Los Angeles street, has been awarded contract for furnishing asbestos-covered corrugated steel for sheds at municipal dock No. 1. Cost $6000.——Road Commissioner Joyner is preparing plans and specifications for bridge on Cypress road over Coyote creek.——L. Holmes, 700 W. First street, is receiving bids for construction of 4-story brick hotel building.——C. H. Russell, 1114 Story building, is preparing plans for 14th Street school building.——R. H. Walker, 813 Higgins building, has prepared plans for 4-story and basement Class C hotel building for Peter Johnson, 2729 San Marino street.——Contract for erection of water purification plant for Tahoe Electric Water Co. has been awarded to the F. E. Newbery Electric Co., 724 S. Olive street, at $3437.50.——Frank Graves & Son, Builders Exchange, have been awarded contract for erection of residence at Coronado Beach for Gale Thompson, for $36,375.——U. S. Metal Products Co., 750 Keller street, has been awarded contract for furnishing sheet metal for building for H. C. Merritt at 8th street and Broadway for $6800.——F. W. Whittier has been awarded contract for improvement of Dacotah avenue for $7663.15.——Fairchild-Gilmore-Wilton Co., Pacific Electric building, has been awarded contract for $5823.20 for improving alley near Spring street.——California-Arizona Construction Co., Brockman building, has been awarded contract for improving Edgemont street at $8393.08.——George H. Oswald, O. T. Johnson building, has been awarded contract at $38,017.09 for improving Vermont avenue.——R. S. Matthews, 164 Larrabee street, Sherman, has been awarded contract for road improvements in district No. 1 at $12,516.05.——Safety Commission has advised installation of new fire-alarm system for entire city. ——Lowest bid submitted for street improvements in Oxford Avenue district was $65,446, exceeding city engineer's estimate by $7129, and work will be readvertised.——City engineer Hamlin reports that double-bore tunnels on First and Second streets would cost $1,996,000.——Spicer & Wattson, Wright & Callender building, have been awarded contract for improving S. Soto street at $7552.57.——J. Whitehorn, 909 Black building, will erect bungalow court costing $30,000. Clinton Nourse, 1128 Story building, is architect.

MADERA—Ed. Layne has been awarded contract for constructing firehouse.

MANHATTAN BEACH—California-Arizona Construction Co., Brockman building, Los Angeles, has been awarded contract for paving North Manhattan avenue with warrenite.

MARE ISLAND—Navy Department has authorized installation of fire system costing $10,000. G. A. McKay is officer in charge.

MARTINEZ—Southern Pacific Co. will lay two miles of spur track to Shell company's new oil refinery.

MARYSVILLE—Engineer F. Woodruff has prepared plans for extensions to system of Hallwood Irrigation Co. and bids will soon be called for.

MERCED—City superintendent Czerny will grade N and R streets from 15th to city limits. Cost about $1000.——Superintendent Czerny has recommended addition to sewer farm.——John F. Sullivan, Los Angeles, will erect hotel in Yosemite National Park.

MODESTO—C. D. Palmer, Oakdale, has been awarded contract for erection of bridge at 26-mile house for $1904.——J. E. Griffiths, Oakdale, has been awarded contract for culvert at Oakdale for $478.——Board of Trustees of Reclamation District No. 1604 will receive bids until noon, February 10, for construction of levees. Plans from C. W. Efiving, secretary of board, 731 Hearst building, San Francisco, or 237 Second street, San Mateo.——Stanislaus County Board of Supervisors has decided to take $216,000 in state highway bonds. This action insures construction of lateral from point near Salida to Buena Vista, about 27 miles.——W. H. Worswick, Jr., has been awarded contract for paving several alleys.——Cement sidewalks have been ordered on 5th street.——City engineer Freitas is preparing plans for water tank for 8th Street station.——Contract for construction of Sproul and Curtis drain ditches has been awarded to E. K. Finney for $12,464. Concrete pipe will be used.

MONROVIA—J. M. Montgomery has been awarded contract for improving California avenue for $9659.55.

NAPA—Improvements costing $15,000 will be made in buildings of Calistoga Hot Springs property. Dr. J. S. Stone, Phelan building, San Francisco, is interested.

NEVADA CITY—County surveyor Miller will make survey and estimate of cost for Lake Vera road.

NEWCASTLE—Bell Electric Co. will construct power-line from Auburn to Shirland tract in Long valley, about 3 miles.

OAKLAND—County surveyor P. A. Haviland has prepared plans for reinforced concrete abutment for Park Street bridge, and bids have been asked. Cost $4500.——United Electric Vehicle Co., 3304 Telegraph avenue, will erect brick and concrete garage.——W. D. Reed, Oakland Bank of Savings building, is preparing plans for canoe house costing $10,000 to be erected on Lake Merritt by board of park directors.——Safety Manufacturing Co., 1007 Broadway, will erect factory building at foot of Webster street, Alameda, costing $70,000.——Nelson & Bauer have been awarded contract for construction of O. J. Mead building. W. Wilde, 1725 Broadway, is architect.——C. N. Burrell, Albany block, is preparing plans for five-story Class C apartment house to be erected on Oak street, near 14th, at a cost of $100,000.

ONTARIO—Contract for improvement of Euclid avenue has been awarded to Highway Construction Co., of San Bernardino, for $58,188.58.——L. F. Miller has been awarded contract for sewers at 54c. per lineal foot.

ORANGE—N. Newton has been awarded contract for concrete addition to warehouse for Central Lemon Growers' Association.

OROVILLE—Feather River Canal Co. has awarded contract for construction of four miles of main ditch, 100 ft. wide, to Daniel Bayless, Biggs.——Trustees are considering paving a number of streets in residence district.——Lawrence Gardella has been awarded contract for construction of two-story concrete building for post-office.

PACIFIC GROVE—Plans are being considered for a new street-lighting system and additional fire hydrants.

PALO ALTO—City council is considering paving of four miles of street during coming year. J. F. Byxbee, Jr., is city engineer.

PASADENA—Engineer Morris has prepared plans for steel and concrete wall for Villa Street reservoir. Work will be started in a few days.——Commissioner Salisbury advises expenditure of about $32,000 for feeder main, including 5780 ft. of 24-in. pipe and 3160 ft. of 20-inch.

PLACERVILLE—J. A. Rafetto will erect 3-story building costing $30,000.——Contract for excavation for station for Standard Oil Co. has been awarded to Arthur S. Lyon. Contract for carpenter work to W. W. Seeley and George Weymouth. Total cost, $20,000.——Board of Supervisors has ordered 4-in. sewer from county hospital replaced with 1000 ft. of 6-in. pipe.

POMONA—Z. M. McKee has been awarded contract for erecting two-story brick garage for L. A. Lorbeer. Cost $7535.——Crandall Construction Co. has been awarded contract for paving at $150,000.

PORTERSVILLE—Gillette Lemon Co. has awarded contract for pumping machinery costing $12,000 to J. A. Ulmer Machinery Co., and contract for concrete pipe to Concrete Pipe & Construction Company.——City engineer Althouse has been instructed to draft new resolutions providing for paving 33 blocks with 4-in. concrete base and 2-in. asphalt wearing surface.——City engineer Althouse has prepared plans for pumphouse.

RED BLUFF—County surveyor Luning is preparing plans for road improvements near Los Molinos.

RIO VISTA—City is considering installation of water meters. R. L. Upham is superintendent.

RICHMOND—L. Foti will erect building near corner of 7th street and Macdonald avenue.——Blake-Bilger Co. has commenced fill for ferry slip at its quarry, for terminal of Richmond-Marin county line.——All bids for construction of municipal wharf have been rejected and new plans and specifications will be prepared.——John Word, 436 13th street, has been awarded contract for macadam paving on 20th street for $3616.-61.——E. H. Higgins, 720 4th street, has been awarded contract for paving on Montgomery avenue for $2298.48.——Hayes & Hopping have awarded contract for erection of two-story brick garage to Sullivan Bros., Berkeley.——Standard Oil Co. will erect hospital building.——City engineer Chapman is pre-

Generated on 2024-09-30 00:45 GMT / https://hdl.handle.net/2027/uiug.30112007838169
Public Domain, Google-digitized / http://www.hathitrust.org/access_use#pd-google
Digitized by Google
Original from UNIVERSITY OF ILLINOIS AT URBANA-CHAMPAIGN

paring plans for road along waterfront to yards of Los Angeles Pressed Brick Company.

RIVERBANK—Board of Trade is considering plans for street lighting system.

RIVERSIDE—Oscar Ford has been awarded contract for about 20,000 lin. ft. pavement on Route 3 at $18,471.20.

ROSEVILLE—Subway under Southern Pacific tracks will be constructed on state highway. Cost, $11,000, will be divided between state and railroad.

SACRAMENTO—Engineering Advisory Board has ratified proposed expenditure of $5000 for levee work in Washington Levee district conditional upon district raising $10,000 for the same work.——State Highway Commission has awarded following contracts: Road between Williams and Colusa to C. W. Cross Co., Oakland, for $55,061; road between Gallivan and San Juan Capistrano, in Orange county, to the M. R. Company, Los Angeles, for $35,830.80; road between Hornbrook and Yreka to the E. T. Johnson Co., Portland, Oregon, for $90,522.10; and road in Division VII, Route 4, Los Angeles county, to the Lee Moor Construction Co., Los Angeles, for $281,640.——Contract for construction of reinforced concrete bridge on Folsom-Orangevale road has been awarded to W. N. Concannon Co., Underwood building, San Francisco, for $5778. County furnishes cement.——Following street work has been ordered: Grading, paving with asphaltic macadam, cement sidewalks, curbs and gutters, and 6-in. sewer on First avenue; grading and paving with 4-in. concrete base and 1½-in. asphalt wearing surface on V street; opening and widening of H street.——Thirtieth street will be improved under Vrooman act by grading and cement sidewalks. M. J. Desmond, city clerk.——Turner & Dahnken Co. will erect theatre costing $100,000. A. W. Cornelius, Merchants National Bank building, San Francisco, is architect.——F. E. Frey has been awarded contract for constructing sewers on Schley avenue, J and P streets.——A. R. Herold, Forum building, has completed plans for five-story Class A building, for Masonic lodge, costing $400,000.——C. C. Cuff, Ochsner building, has prepared plans for 7-story building to be erected on K street, costing $150,000.——E. C. Hemmings, Diepenbrock building, has prepared plans for 8-story office building costing $150,000.

SAN BERNARDINO—Charles McElvaine has been awarded contract for sewers on Willis avenue and Giavanola street for 62c. per lin. ft. sewer, $40 each for manholes, and $65 each for flush tanks.——Consumers' Ice & Cold Storage Co. will erect ice plant costing about $100,000. W. M. Hoagland and Seth Hartley are interested.——Fontana Fruit Exchange will erect reinforced concrete packing house costing $30,000. Wm. Curlett & Son, Merchants National Bank building, Los Angeles, are architects.——L. L. Beeman has prepared plans for high school athletic field costing $1200.

SAN DIEGO—Pacific Building Co. will erect residence on First street near Maple, costing $10,000.——J. E. Clouse has been awarded contract for grading, paving with decomposed granite, cement curbs, culverts, and sidewalks on Pescadero street for $9911.75.——F. Weet, 4584 Park boulevard, will erect 3-story brick and frame building costing $20,000.——H. G. Fenton has been awarded contract for construction of road from Tia Juana to Snell's station for $21,941.——Sutton & O'Neill have been awarded contract for foundation for 4-story office building for J. Price.——J. A. Stauffer, Salt Lake City, will erect 3-story reinforced concrete building at 10th and E streets costing $25,000.——Bids will be received until February 27 by the Navy Department, Washington, D. C., for construction of high-power wireless station.——Santa Fe railroad will make alterations in west wharf.——C. C. McBride and James Masterson will erect brick garage costing $4000.——Building Inspector J. L. Bacon is preparing plans for reinforced concrete and hollow tile isolation hospital.——City engineer has been instructed to prepare plans preparatory to advertising for bids for completing Ocean Beach sewer.——Cabrillo Club is considering plans for new clubhouse costing $150,000. W. H. A. Johnston is chairman of committee.——Water Department has been authorized to proceed with Pine Creek diverting dam. Funds will be provided from part of recent $705,000 bond issue.——W. A. Crane and Ed. Fletcher will erect hotel and store building at 9th street and Broadway.——Harbor bonds for $375,000 have been sold to Spitzer, Borick & Co., Toledo, Ohio.

SAN FRANCISCO—Board of State Harbor Commissioners has awarded contract for construction of pier 24 to Healy-Tibbetts Construction Co., Main and Market streets, for $98,300.——James P. Fletcher, Russ building, and Adler & Lewis, have been awarded contract by Pacific Realty Co. for additions and alterations to building on Pacific avenue for $10,972.50, and building on California street for $6750.——Lindgren Co., Monadnock building, has been awarded contract for construction of exhibit building at Exposition for French government for $88,820.——Eaton & Smith, 11th and Harrison streets, have been awarded contract for paving Powell street with brick for $2572.——Board of Works has ordered paving of 42nd avenue, Beach street, and Lincoln way.——John Galen Howard, 604 Mission street, is preparing plans for auditorium and classroom building for University of California, costing $800,000.——Western Building & Engineering Co., Phelan building, has been awarded contract for construction of waterfront entrance at Exposition for $19,755.——Bernard Langendorf, 878 McAllister street, has awarded contract to Onward Investment Co. for erection of two-story brick and steel building for $41,450.——Marcus Loew is considering erection of $1,000,000 theatre.——City engineer M. M. O'Shaughnessy is preparing plans for extension of Market street over Twin Peaks to intersection with Portola drive. Estimated cost, $350,000.——A. J. Laib, Russ building, has completed plans for four-story reinforced concrete apartment house costing $45,000.——G. A. Applegarth, Call building, has completed plans for five-story Class C apartment house costing $60,000 to be erected at California and Stockton streets.——E. T. Foulkes, Crocker building, has completed plans for five-story and basement Class C hotel, costing $50,000, to be erected on Sutter street west of Taylor.——Railroad Commission has approved bond issue of $52,000 of Plumas Light & Power Co., and construction of 400-hp. unit will be started soon. Edwin E. Cox, First National Bank building, is president.——Contract for ten 55,000-bbl. oil tanks for Shell interests has been awarded to the Petroleum Iron Works of Pennsylvania for $136,590.——Additional electric lights will be installed on Van Ness avenue, costing about $15,000.——F. R. Ritchie & Co., Chronicle building, has been awarded contract for paving Fifth avenue from Geary to Fulton streets for $5604.——Flinn & Treacy, First National Bank building, have been awarded contract for paving Clement street, from 33rd to 38th avenue, for $7911.——Following street work has been ordered: Grading Pennsylvania avenue, cost about $22,000; curbing and paving Corbett avenue, cost about $19,000; paving Taylor street, Arguello boulevard, and De Haro street; sidewalks, catch-basins, culverts, sewers, and asphalt pavement on 19th avenue; sidewalks, curbs, catch-basins, culverts, and asphalt pavement on Fulton street; sewers on Delta street, Talbert street, and Peabody street. Curbs and asphalt pavement on Broad street.——American Can Co., Mills building, will erect factory costing $300,000 at 20th and Kentucky streets.——Western Sugar Refining Co., California and Davis streets, will erect sugar refinery costing $200,000.——W. A. Rudgear will erect apartment house costing $90,000 at Bush and Stockton streets.——McLeren & Petersen, Sharon building, have been awarded contract by Austrian Concession Co. to erect restaurant on Exposition grounds for $22,000.——Sewers have been ordered laid in following streets: Tioga, Teddy, Campbell, Clarendon, and Burnett avenues.——Contract for concrete and brick sidewalks in St. Francis Wood has been awarded to Armstead & Co. for $933.40.

SAN GABRIEL—D. S. McEwan Electric Co., 46 Pier avenue, Ocean Park, has been awarded contract for lighting system on Mission drive at $2380.

SAN JOSE—Hull avenue will be graveled and concrete curbs and gutters constructed.——County surveyor I. L. Ryder has been ordered to prepare plans for following work: Improvement of Saratoga Summit road and sprinkling system for same; improvement of Los Gatos and Saratoga road; improvement of Almaden and Los Gatos road and Union avenue; bridge over Los Gatos creek near Alma; bridge over Permanente creek on Fremont avenue; four bridges over San Tomas creek on Quito road; three bridges on Congress Springs road, three bridges on Homestead road, and two bridges over Guadalupe creek.——Council has passed resolution ordering paving of two blocks on First street with 1½-in. asphaltic concrete.

SAN PEDRO—Salt Lake Railway Co. will repair fire damage on wharf and trestle for Crescent Wharf & Warehouse Co. Cost about $6600.

SANTA ANA—Supervisors are considering use of $160,000 of unexpended balance of county road bond issue to build highway along coast from Bay City to Sierra, about 35 miles. Residents along route will raise $100,000 addition.——City council is considering lighting Fairview avenue between Main and Bristol streets.

SANTA BARBARA—Lawrence Orella will erect brick and concrete building costing $4000.——A. A. Lemmon has been awarded contract for construction of sewer on Figueroa street.——Six-inch vitrified-pipe sewer will be constructed on Sola street for 253 ft.——Santa Barbara & Suburban Electric Railroad has applied for franchise for extension of line east from Normal school one-half mile.——Hollister avenue will be improved from Mission street to city limits, and Mission street will be improved from Hollister to State street.——Santa Barbara Development Co. will erect brick garage on lower State street.

SANTA CLARA—City trustees have ordered paving of state highway through city, about two miles.

SANTA CRUZ—City has asked for bids for furnishing auto-truck for water department.——City engineer W. J. Thompson

Generated on 2024-09-30 00:45 GMT / https://hdl.handle.net/2027/uiug.30112007838169
Public Domain, Google-digitized / http://www.hathitrust.org/access_use#pd-google
Digitized by Google
Original from UNIVERSITY OF ILLINOIS AT URBANA-CHAMPAIGN

has been instructed to prepare specifications for a 20-ft. concrete base roadway on several city streets.——Contract for macadamizing Elm street has been awarded to Miglierini Bros. at $2260.——City engineer has been instructed to prepare plans for sewers in vicinity of Garfield Park school.

SANTA MONICA—J. M. Fehrenback, Los Angeles, has been awarded contract for improving Bay street between 6th and 8th.

SANTA PAULA—Contract for brick addition to First National Bank building has been awarded to Ventura Mill & Lumber Co., Ventura, at $6000.

SANTA ROSA—Bordwell & Zimmerman have been awarded contract for county bridges over Franz and Kekky creeks.

SAWTELLE—City engineer is preparing plans for improving Santa Monica boulevard with warrenite and 5-in. concrete base.

SEBASTOPOL—City will construct 350,000-gal. concrete reservoir. H. B. Scudder is superintendent.

SIERRA MADRE—City engineer W. F. Bixby, 502 Mason building, Los Angeles, is preparing plans for sewer system in Canyon park.

STANFORD UNIVERSITY—Trustees of University are considering construction of water system, including dam below Searsville lake, to supply land in foothills near campus.

ST. HELENA—Contract for erection of two-story building for Native Sons' hall has been awarded to J. A. Jursch for $7500.

STIRLING CITY—Diamond Match Co. is considering extending its railroad northerly toward Butte Meadows.

STOCKTON—A. B. Munson has been awarded contract for constructing bridge over Calaveras river on McAllen road for $2927.——H. E. Williamson will erect five-story building on South San Joaquin street.——Sewers will be constructed in district between South and 8th streets and Southern Pacific tracks and Center street.——Bids will be received until latter part of February for grading and paving with asphaltic macadam streets between Rose and North street and Edison and Yosemite street.——W. C. Gaskell has been awarded contract for curbing and guttering Washington street.——Board of education will call for bids for construction of North Street school. Cost about $75,000. Stone & Wright are architects.

SUSANVILLE—Supervisors will call election to vote on issuing bonds for $120,000 for new courthouse and county hospital. ——Upon application of H. H. Dunbar, trustees are calling for bids on franchise for gas plant.

SUNNYVALE—City engineer Nikirk has prepared plans for municipal water system.

TULARE—The Federal Construction Co., Sharon building, San Francisco, has been awarded contract for paving 17 blocks of streets for $90,494.——Contract for installing conduit and cable for electrolier system was awarded for E. F. McWein, Ocean Park, for $4300.

UPLAND—George Snyder Contracting Co. has been awarded contract for improving 9th avenue at 3¼c. per sq. ft. for grading and oiling, and 18c. per lin. ft. for curbing.

VENICE—D. H. Williams, 354 Indiana street, has been awarded contract for construction of frame dining-hall at Soldiers' Home at Sawtelle for $14,173.

VISALIA—Following bids were received by Board of Supervisors for road construction: Badger-Sand Creek road, Charles Neff, $1260; F. C. Moore, $597.50; C. E. Hill, $790; Chas. Broughton, $1050. Badger-Eshom Valley road: Wm. Watt, $1250; F. A. Thomas, $1199; W. D. Murray, $950.——Board of Supervisors has appropriated sufficient funds to finance sale of state highway bonds and to construct bridges through county, insuring building balance of state highway in county.——Elks' Building Association will erect structure costing about $150,000.——J. C. Thayer, Fresno, is preparing plans for addition to Visalia Co-operatve Creamery costing $3000.

WHITTIER—Rea & Garstang, 720 Black building, Los Angeles, are preparing plans for one-story office building for Murphy Oil Co.——Grammar school building costing $25,000 will be erected. Tuttle & Angel, Delta building, Los Angeles, are architects.

WILLITS—City engineer Gorlinski is preparing plans for storm-sewer system.

WILLOWS—West Sycamore street will be paved for four blocks. J. P. Ryan is city engineer.

WINTERS—Bonds for $50,000 for high school building were carried.——Northern California Power Co. will construct electric lighting plant.

WOODLAND—Bonds for $100,000 for grammar school have been sold to N. W. Halsey Co., San Francisco.

YREKA—Merriman & Moore have been awarded contract for constructing Beaton-Bender road for $2495 and for constructing Portuguese Hill road for $1400.

YUBA CITY—Property owners south of city are considering construction of four miles of drainage ditch.——A. B. Miller, Marysville, will construct packing plant costing $25,000.——Feather River Transportation Co. will construct wharf.

OREGON

ASTORIA—Astoria Building & Investment Co. will erect apartment building costing $40,000. F. W. Beach is interested.

BAKER—Expenditure of $180,000 on municipal hydro-electric development has been abandoned, local power company having reduced rates.

BANDON—Contract for improving and constructing sidewalks on Oregon avenue has been awarded to W. H. Webb for $11,900. ——Port of Bandon is considering purchase of dredge for harbor work. R. H. Rosa is president of commission.

CHILOQUIN—H. W. Hincks, engineer for U. S. Indian Service, is preparing plans for three steel or wooden bridges on Klamath Indian Reservation.

FLORENCE—Commissioners of Port of Siuslaw will issue bonds for $100,000 to extend jetties. E. R. McCormick is member of Commission.

GRANT'S PASS—E. E. McClaran, Lumber Exchange building, Portland, has completed plans for Josephine county courthouse, costing $20,000 to $80,000, according to material.

GRESHAM—Union High School, costing $25,000, will be erected.

KLAMATH FALLS—Kerns Bros. will extend the distribution lines from their power plant at Keno.——U. S. Reclamation Service will enlarge Griffith lateral on canal system.——City council is considering paving road to Shippington with oiled macadam, about 4½ miles.

McMINNVILLE—County has appropriated $15,000 for improvement of Grande Ronde road.

MEDFORD—Sound Construction Co., Couch building, Portland, has been awarded contract for post-office at $97,000.

MILWAUKEE—Glebisch & Joplin, Rothchild building, Portland, were low bidders at $16,466 for laying water main and will be awarded contract subject to injunction suit now pending.——Franchise through town has been granted to Portland & Oregon City Railroad Company.

NORTH BEND—Bids will be received by Architect Tourtellotte, Rothchild building, Portland, for construction of Simpson hotel. Cost about $100,000.

OREGON CITY—Oregon Engineering & Construction Co., Beaver Bdg., has been awarded contract for pipe-line for gravity water system for $315,000. Willamette Iron & Steel Works, 462 North Front street, Portland, will furnish steel pipe required.

OSWEGO—Oswego Lake Water, Light & Power Co. has been formed to supply city with water and power. A. S. Pattulo, Sherlock building, Portland, is interested.

PENDLETON—S. Rugo & Sons have been awarded contract for 16,000 ft. of sidewalks.——Plans for postoffice have been approved and bids will be called for by Supervising Architect, Treasury Department, Washington, D. C., in February. Cost, $122,000.——Umatilla county will spend $100,000 for road improvements, including completion of macadam road from Pendleton to Milton.

PILOT ROCK—H. Freuler, Walla Walla, Washington, has reported that a lighting plant would cost about $3800.

PORT ORCHARD—Nelson & Shoule have been awarded contract for grading in Division 1 for $10,000.

PORTLAND—Bodman & Burge were low bidders for grading and constructing curbs and walks on 78th street at $1802, also for improvement of 62nd street at $5873.——Cowlitz Bridge Co., Yeon building, was awarded contract for construction of eight steel swing bridges over Dalles-Celilo canal for $15,863.——Frye & Co., 13th and Hoyt streets, will erect market building.——Bids will be received until about February 24 by Col. McKinstry, U. S. Engineer Office, for construction of tender for suction dredge Monticello.——Columbia Construction Co. has been awarded contract for furnishing sand, gravel, crushed rock, and screenings to city.——Contract for furnishing auto service truck was awarded to Seagrave Fire Apparatus Co., Columbus, Ohio, for $6468, for auto combination hose and chemical wagon to White Automobile Co., Cleveland, Ohio, for $5900.——Root & Kerr, Henry building, are preparing plans for residence for L. Rosenblatt costing $20,000.——Stetler Box Factory, 10th and Glisan streets, will erect box factory costing $60,000.——Thomas Muir, Abington building, has been awarded contract for erection of concrete warehouse costing $8000.——Roberts & Thomas, Selling building, have completed plans for club-house at Westover, costing $20,000.——Oregon Home Building Association, Northwestern Bank building, will erect frame warehouse with concrete floors, costing $35,000.——Commissioner Daly has completed plans for additional garbage incinerator costing $275,000. ——County Commissioners will soon ask for bids on construction of four reinforced concrete bridges on Columbia highway. Total cost, $40,000.——Valley & Siletz Railroad Co. will construct 10 miles of additional road in spring. R. L. Donald, Northwestern Bank building, is general manager.——East 62nd street will be improved by grading, draining, and cement side-

Generated on 2024-09-30 00:44 GMT / https://hdl.handle.net/2027/uiug.30112007838169
Public Domain, Google-digitized / http://www.hathitrust.org/access_use#pd-google
Digitized by Google
Original from UNIVERSITY OF ILLINOIS AT URBANA-CHAMPAIGN

walks and curbs for about one-fourth mile. Cost, $6373.——East 78th street will be improved by grading and cement sidewalks. Cost, $2000.——Streets in the vicinity of east 40th avenue will be improved at a cost of $3920.——Bids will be received until 2 p.m., February 23, by Columbia River Interstate Bridge Commission, room 201 Court-house, for construction of Columbia River bridge. Contract will be let in several sections or for the whole of the work. Work includes 5000 lin. ft. steel structure, 12,000 lin. ft. embankment, requiring 9500 tons steel, 1,000,000 cu. yd. embankment, and 29,000 cu. yd. concrete. Plans on file with county clerk, Portland, county clerk, Vancouver, Washington, and State Commissioner of Highways, Salem, Oregon. Copies from secretary Interstate Bridge Commission, Vancouver, Washington, or from Waddell & Harrington, Kansas City, Missouri, upon payment of $25.——Cochran, Nutting & Co., 415 South Hayes street, has been awarded contract for concrete pavement on East 88th street for $4066.——Pacific Chemical Co. has been formed to develop mineral deposits in beds of Sumner and Albert lakes. Work will include wood-pipe line costing $2,000,000, manufacturing plant on Deschutes river, costing $5,000,000, and hydro-electric development of about 100,000 hp. Shepard & Brock, Yeon building, are interested.——William Lind, 525 East 16th street was low bidder for Willow Street sewer at $148,639.13 for reinforced concrete.——Montague-O'Reilly Co., Blake-McFall building, was low bidder for paving East 44th and East 45th streets at $9552.60 for asphaltic concrete.——Oregon Independent Paving Co., Water and Salmon streets, was low bidder on improvement of street in Rose City park at $2508.27 for concrete.——Solomon & Harra were low bidders on grading and sidewalk on Water and Baker streets, at $1284.50.——East Side Business Men's Club will erect club building costing $15,000.——Portland Bridge & Building Co., Worcester building., has been awarded contract for construction of pile and timber fender system at municipal dock No. 1, for $5470.

ROSEBURG—Contract for construction of two miles of road near Canonville has been awarded to H. J. Hildeburn, for $9976.——Contract for construction of bridge across S. Umpqua river has been awarded to Portland Bridge Co., Worcester building, Portland, for $5993.

SALEM—Council has voted to spend about $16,000 on sewer work this winter, and to proceed with construction of 1000 ft. of sewer on Cherry avenue. Estimated cost $1300.

SEASIDE—F. J. Walsh, Astoria, has reported in favor of a canal to Columbia river, 30 ft. wide, 5 ft. deep, and involving 600,000 cu. yd. of excavation.

ST. JOHNS—L. R. Bailey is preparing plans for plant for Western Cooperage Co. costing $75,000.

TILLAMOOK—North Coast Dry Kiln Co., 15th and Newton street, Seattle, has been awarded contract for concrete dry kiln for A. F. Coates Lumber Company.

WARRENTON—Municipal water system costing $150,000, including 16 miles of steel or wood pipe-line will be constructed. H. S. Green, Paulsen building, Spokane, is engineer.

WASHINGTON

ABERDEEN—City engineer is preparing estimates on filling tide-flats in North Aberdeen; also for sewers on Sumner, Jeffries, and other streets, costing $40,000.——Grays Harbor Construction Co. has been awarded contract for construction of three dry kilns for Aloha Lumber Co. for $15,000.——C. E. Troutman has completed plans for two-story reinforced concrete building for postoffice.

ATTALIA—Contract for construction of drainage system for 2500 acres in Walla Walla county has been awarded to J. C. Broad, Jamieson building, Spokane.

ANACORTES—Company has been formed to erect flour and feed mill and elevator. C. E. Holderman is interested.

BELLINGHAM—Stone & Webster Engineering Corporation, Pioneer building, Seattle, will construct power plant at Concrete.——Ditches costing $45,000 will be constructed during coming year. C. M. Adams is county engineer.——Crane Co., 2nd and King streets, Seattle, has been awarded contract for cast-iron pipe at $5000.——Dormitory costing $150,000 will be erected at State Normal school.

CLARKSTON—Electric railway will be constructed to Vineland and Asotin. Total cost $750,000. R. C. Dahlhjelm is interested.——Contract for reconstruction of Flatiron building has been awarded to Robert Meyer for $7500.——Bridge street will be graveled and sidewalks constructed. Cost about $6000.

EATONVILLE—Bonds for $45,000 for high school building have been voted.

EVERETT—Plans for new post-office have been approved and Treasury Department will soon call for bids.

HARRINGTON—Cement sidewalks will be constructed on 3rd street.

HOQUIAM—Contract for grading on Chicago, Milwaukee & St. Paul railroad in this vicinity has been awarded to Hans Pedersen, Madison block, Seattle, for $25,000.——Northern Pacific will receive bids for steel superstructure of bridge. W. C. Albee, Tacoma, is division superintendent.

KELSO—William Beck & Son have been awarded contract for filling bridge on Dungan road for $865.

KETTLE FALLS—State road between Meyers Falls and Davenport, about 60 miles, is proposed. C. J. Webb is interested.

LACROSSE—Farmers' Union Elevator & Produce Co. will build flour mill. M. E. Stansell is interested.

NORTH YAKIMA—Contract for cement pipe on Union ditch has been awarded to W. M. Walker at $1000.——State highway to Tacoma is being considered. W. B. Newcomb is chairman of committee.——Road improvements costing $248,000 will be made during coming year.——Weatherwax & Xon are preparing plans for rebuilding of Pioneer building, for Yakima Trust Co.——Contract for construction of 2½ miles of Granger-Outlook road has been awarded to A. H. Zane & Co. for $8523.75.——Bids for highway work costing $31,000 will soon be called for. O. E. Breshears is county engineer.

OLYMPIA—V. W. Voorhees, Eitel building, Seattle, is preparing plans for 7-story building for Olympia Hotel Co. for $100,000.——State Highway Board has recommended expenditure of about $2,000,000 on highway construction and maintenance during next two years.——Contract for improving streets near city park has been awarded to Van Eaton & Sumpton for $1800, also for improving Farragut avenue to same bidders at $1022.——Oregon-Washington Railroad & Navigation Co. will erect depot at 4th and Adams streets costing $15,000.

OKANOGAN—D. D. Davenport, Omak, has been awarded contract for erection of court-house at $19,300. Contract for heating and plumbing has been awarded to R. L. Cole, Tonasket, at $3600.

PORT ANGELES—P. J. Woods has been awarded contract for street improvements in district No. 24 for $31,596.35.—— Pioneer Bindery & Printing Co. has been awarded contract for steel vault and office furniture for court-house for $8879.41.

PORT TOWNSEND—Road supervisor P. M. Coyne has been authorized to proceed with construction of Keymess cut-off road.

PUYALLUP—County Commissioners have authorized construction of road to Edgewood.——About 2½ miles of road will be constructed connecting Graham with Puyallup.

RICHLAND—Commissioners of drainage district No. 7 have called for bids for construction of ditches involving about 115,000 cu. yd. excavation.

RIDGEFIELD—Beattie McClelland shingle mill will be remodeled into electric lighting plant.

SELAH—Plans are being prepared for warehouse for Fruit Growers' Exchange. Walter Clift is interested.

SEATTLE—Larsen & Knipe have been awarded contract for erection of reinforcing steel on Sears-Roebuck building, for $15,000.——Puget Sound Traction, Light & Power Co. will spend $100,000 on right-of-way repairs between Seattle and Tacoma, including two new bridges.——J. G. Jahn, 504 Republican street, has been awarded contract for 2-story brick and concrete building for R. Lyons at $7800.——Contract for construction of 2-story concrete and brick warehouse for C. A. Philbrick has been awarded to Ernst Hardware & Plumbing Co., 514 Pike street.——Bids will be received until 1:30 p.m., February 10, by C. E. Remsberg, secretary Port Commission, 843 Central building, for furnishing cement for 7-story warehouse.——County Commissioners have decided to use belt course of terra cotta on fourth story of new court-house in order to save expense, and new bids will be asked.——Port Commission has decided to build new terminal at West Seattle ferry costing $20,000.——Contract for construction of approach to Buckley bridge has been awarded to Weymouth Construction Co., pier 1, for $3996.22. Contract for bridge itself to McCreary & Willard for $1850.——American Dredge & Construction Co. has been awarded contract for dredge for Alaska tinfields by American Tin Can Co., Portland. Cost, $50,000.——S. Normile, 608 Kinnear place, has been awarded contract for paving alley in block 8 for $1502.70.——Imperial Candy Co., 808 Western street, will erect manufacturing plant costing $300,000.——Woeck & Burns, Oriental building, will erect addition to Arcade building for Arcade Investment Co. costing $50,000. Bids will be received at the U. S. Engineer Office, 602 Burke building, until noon, February 10, for furnishing and delivering stone for jetty construction at Lone Tree, Washington. Particulars from J. B. Cavanaugh, Major of Engineers.——Bids will be received until about March 20 for constructing wooden pile bulkhead on Railroad avenue. Estimated cost, including filling and paving, about $500,000.——Harbor Paving Co., Aberdeen, Washington, has been awarded contract for sewers in 37th avenue for $31,262.29.——Contract for improving 14th avenue for about 4½ miles has been awarded to W. W. Wilcox, Sunnydale, for $30,300.——Seattle Construction & Dry Dock Co., Charles street, has been awarded contract for construction of

Generated on 2024-09-30 00:51 GMT / https://hdl.handle.net/2027/uiug.30112007838169
Public Domain, Google-digitized / http://www.hathitrust.org/access_use#pd-google
Digitized by Google
Original from UNIVERSITY OF ILLINOIS AT URBANA-CHAMPAIGN

three submarines for U. S. Navy for $450,000 each.——Port Commissioners have awarded contract for installing three units of refrigerating plant at municipal docks to Vilter Manufacturing Co., Milwaukee, Wisconsin, for $50,000.——C. A. Philbrick, First National Bank building, will erect 2-story concrete warehouse on Terry avenue.——City engineer A. H. Dimock has prepared plans for grading of Fauntleroy avenue and other streets, costing $51,000.——L. R. Ellis, Central building, has been awarded contract for construction of water mains in Third avenue for $1676.—— City engineer Dimock is preparing plans for grade separation at Argo station costing about $500,000. Work will include 1800 ft. double track reinforced concrete tunnel. Bids will probably not be called for until summer.——Bids will be received until noon, February 17, at U. S. Engineer Office, 602 Burke building, for excavation, removal of sections of existing coffer dam, and construction of new coffer dam at the Puget Sound-Lake Washington lock site. J. B. Cavanaugh, Major of Engineers.——Contract for heating system for Ballard school has been awarded to P. J. Lavan, Crary building, for $33,250; contract for electrical work at school to Ne Page, McKenny Co., Armour building, for $8985.——City engineer Dimock has completed plans for paving and installation of cluster lights on 10th avenue and other streets; cost about $235,000.——Plans have also been completed for paving and filling on Utah avenue costing about $186,000.——California Paper & Board Mills, 40 First street, San Francisco, will erect boxboard mill.——Anderson Steamboat Co., Madison park, has been awarded contract for 120-ft. steel hull passenger boat for Eagle Harbor Transportation Co.——Northern Life Insurance Co. will erect reinforced concrete and terra cotta office building, costing $80,000. Carl Sirbrand, Arcade building, is architect.——Charles Manning and J. E. Morris will erect 4-story reinforced concrete building at 11th avenue and East Pine street.——Seneca Improvement Co. will erect 5-story reinforced concrete and brick building, costing $75,000. W. P. White, Transportation building, is architect. ——Improvements costing about $10,000 will be made in Federal building. Gault O'Neil is custodian.——Contract for cluster lights on Madison street has been awarded to Elliott Construction Co. for $3700.45.——H. Ryan, 1516 E. Prospect street, will erect apartment house costing $15,000.——Maney & Clapp, Burke building, have been awarded contract for superstructure for Grand Trunk dock. Cost about $75,000.

SNOHOMISH—Plans for installation of concrete flood-gates and drainage system, costing about $49,000, on Grand Marsh, were adopted by County Commissioners.

SPOKANE—Washington Brick, Lime & Sewer Pipe Co., Washington and Pacific streets, has been awarded sub-contract for furnishing terra cotta for court-house at Seattle for $38,000. ——Contract for grading in connection with Northern Pacific grade separation has been awarded to Parker, Moran & Parker. Work includes about 50,000 cu. yd. rock and earth.——J. E. Cunningham was low bidder at $45,187 for constructing county tuberculosis sanitarium. Blair-Meagher Co. was low bidder for heating, and Standard Plumbing & Heating Co. for plumbing. ——Marcus Loew will erect theatre seating $2500.——Deputy county engineer McClung has recommended concrete bridge costing $21,000 over Spokane river at Nine Mile.——Carstens Packing Co., Tacoma, will erect packing house.——H. L. Cooper, consulting engineer, is preparing plans for construction of hydro-electric power plant on Pend Oreille, having a capacity of 35,000 hp. and costing $7,000,000.——Sub-contract for detouring bridge from Sprague avenue and Hilliard street on Northern Pacific grade separation has been awarded to R. T. Lawrence.

TACOMA—Grant, Smith & Co., has been awarded contract for filling tunnel at about $50,000.——Dennett Milling Co. will build addition to mill. J. M. Dennett is president.——McHugh Contracting Co. has been awarded contract for sidewalks in district No. 935 for $1670.——Herman Johnson will erect apartment house costing $6500 at 1422 South 12th street.——A. L. Russell has been awarded contract for sidewalks in district No. 936, for $800.——Anderson & Liljebeck have been awarded contract for sidewalks in district No. 932 for $2450.——Following contracts for river work have been awarded: To Marsh & Tweeden, Province building, construction of 20-in. hydraulic dredge, for $66,000; to Cross, Rollins & Co., Seattle, for dredging, dredge to be furnished by counties, 2,400,000 cu. yd. at $0.073, 600,000 cu. yd. at $0.1095. Unit prices for bulkhead as follows: Piling, $0.195 per lin. ft.; lumber in place, $24 per M.B.M.; iron and steel, $0.04 per lb.; clearing and grubbing, $200 per acre; fir brush, $4 per cord.——Carman Mfg. Co., H and 25th streets, will make changes in factory costing $25,000.——Order of Moose will erect building costing $35,000. A. A. Duenwald, 3607 South 12th street, is on building committee.——Heath & Gove, National Realty building, are preparing plans for store buildings at South 9th and D streets, costing $40,000.——Puyallup avenue will be paved with wood blocks from Pacific avenue to A street. ——P. Manson has been awarded contract for bulkhead on Puyallup river, for $4597.53.——Chicago, Milwaukee & St. Paul railroad has applied for permission to erect steel bridge costing $50,000 across tracks of other railroads.

TOPPENISH—V. M. Ruffner will erect concrete building costing $3000.——Northern Pacific railroad will make extensions to ice plant.

WALLA WALLA—George H. Purvis, Seattle, is preparing plans for theatre building for Clarence Crews, costing $50,000. ——A. W. Eiler will erect theatre costing $75,000.——Brown-Lewis Co. will erect harvesting machinery factory.

WARDEN—Contract for construction of municipal water system was let to Municipal Equipment Co., Spokane, for $3570.

WESTPORT—Christensen & Pugh, Hoquiam, have been awarded contract for about 3200 lin. ft. of paving for $9153.

WOODLAND—Expenditure of $8000 for construction of highway on north fork of Lewis river has been authorized.

UTAH

BINGHAM CITY—L. W Leete, Salt Lake City, has completed plans for moving picture theatre costing $10,000.

BEAVER—Beaver River Power Co. will construct addition to power plant on Beaver river together with several miles of transmission line. A. L. Woodhouse, Richfield, Utah, is manager.

CORINNE—Organization of drainage district is being considered. Gustin, Gillette & Brayton, Salt Lake City, are interested

ESCALANTE—Municipal waterworks will be constructed costing $45,000

GREEN RIVER—Contract for construction of municipal light and power plant has been awarded to Green Construction Co. of Tooele for $20,000.

LEHI—Municipal power plant costing $150,000 is being considered.

LINDON—Water system costing $27,900 and including 13 miles of pipe is being considered. C. G. Johnson is interested.

LOGAN—J. L. Ross was low bidder for following county bridges: Benson bridge, 125-ft. span, at $4950; bridge over Muddy river at Lewiston, 50-ft. span, at $2950; and Midville bridge, $3750.——Contract for construction of 4-story hotel and bank building for Hotel Logan Co. has been awarded to Hyde & Thompson Building Co. Same company has been awarded contract for construction of chemical laboratory for Utah Agricultural College.

OGDEN—Board of Health has recommended installation of septic tanks at sewer outfall.——Ogden, Logan & Idaho Railway Co. will extend electric line from Idlewild to Huntsville. ——City Commissioners are considering expenditure of $80,000 for extensions to sewer system.——Grand Canyon Canal & Power Co. has been incorporated to develop power on John Day's river. H. J. Craven is interested.——Sewer district has been created on Jackson avenue, from 20th to 21st street.—— L. B. Hammon & Sons, Roy, Utah, have been awarded contract for making fill on Washington avenue.——Ogden Rapid Transit Co. will extend line from Wellsville to Brigham City. P. D. Kline is general manager and purchasing agent.

OREM—Company is being formed to construct water system for Orem and Provo Bench.

PROVO—U. S. Reclamation Service has awarded the following contracts for structures in Strawberry Valley project: Divisions 1 and 3, to Mendenhall-Straw-Bird Construction Co., Springville, Utah, for $47,465 and $37,508; division 2, to Rideout & Andrus, Draper, Utah, for $25,898.

SALT LAKE CITY—B. F. Baum, engineer for James Stewart & Co., has suggested plan to state capitol commission for sluicing dirt from hill east of capitol to make fill across cañon of City creek.——City engineer Sylvester Q. Cannon has recommended construction of new garbage incinerator. Cost, $22,000. ——W. M. Gibson, Grand Junction, Colorado, has been awarded contract for sewer extension No. 336 for $57,892.58.——Utah Ice & Cold Storage Co. will erect addition to plant costing $150,000. E. J. Ulrich, Colorado Springs, is president.——Carthey & Dumbeck have been awarded contract at $8839 for construction of heating and ventilating plant for 15th Street school.——City Recorder will receive bids early in 1915 for following work: ten miles of water mains, 24-in. by-pass, Parley's cañon, Twin Lakes reservoir, 9600 cu. yd. rubble concrete. Estimated cost, $153,000.——Christensen Construction Co. has been awarded large contract for grading on Union Pacific railroad near Ogden. ——Plans are being considered for erection of sugar factory costing $500,000. J. W. McHenry is interested.

IDAHO

TWIN FALLS—Municipal water system, costing $600,000 and including 11 miles of main line and new distribution system, is being considered.——Contract for bridge across Snake river near Murtaugh has been awarded to J. H. Forbes & Co., Caldwell, Idaho, for $5946.

Generated on 2024-09-30 00:47 GMT / https://hdl.handle.net/2027/uiug.30112007838169
Public Domain, Google-digitized / http://www.hathitrust.org/access_use#pd-google
Digitized by Google
Original from UNIVERSITY OF ILLINOIS AT URBANA-CHAMPAIGN

Personal

JOHN B. YEON, Portland, has been reappointed roadmaster for Multnomah county.

C. D. MARTIN has been appointed city engineer of Merced, succeeding J. F. MCSWAIN.

CHARLES PETIT has been appointed county surveyor of Ventura county, succeeding E. E. EVERETT.

F. L. A. GORLINSKI has been appointed city engineer and superintendent of streets of Willits, California.

JAMES SOURWINE, of Upland, has been appointed county surveyor of San Bernardino county, succeeding SHIRLEY BRIGHT.

CHARLES MCELVAINE has been appointed superintendent of streets of San Bernardino, succeeding KARL TUTTLE, resigned.

GEORGE P. DUBOSE has been appointed superintendent of the plant of the Holt Manufacturing Co. at Stockton, California.

J. W. CUNNINGHAM and J. O. BAAR have opened offices for the practice of civil engineering at 720 Northwestern Bank building, Portland.

T. E. PHIPPS has been appointed chief engineer of the Washington Public Service Commission, succeeding FRED S. BURROUGHS, resigned.

W. F. DETERT has been elected president of the Northern California Power Co., and H. H. NOBLE chairman of the board of directors.

L. R. LOTHROP, formerly street superintendent of San Bernardino, has been appointed chief highway engineer of San Bernardino county.

E. A. BAYLEY, consulting engineer, of Los Angeles, has been inspecting the Modesto Irrigation District system for the directors of the district.

ROBERT VANCE ORBISON, who has been deputy engineer for the past two years, has been appointed city engineer of Pasadena, succeeding the late LEWIS E. SMITH.

FRED M. MILLER, county surveyor of Nevada county and city engineer of Grass Valley, has been appointed chief engineer for the State Department of Corporations.

S. B. ROBBINS has opened an office in the Ford building, Great Falls, Montana, as consulting engineer, specializing in irrigation, drainage, and agricultural development.

C. E. GROESBECK has been appointed vice-president and general manager of the Utah Power & Light Co., with headquarters at Salt Lake City, succeeding P. B. SAWYER, resigned.

FRANK R. DEVLIN has been appointed member of the Railroad Commission of California, to fill the vacancy created by the election of J. M. ESHLEMAN to be lieutenant-governor.

ROBERT BRIDGES has been appointed president of the Seattle Port Commission, succeeding General H. M. CHITTENDEN. J. R. WEST has been appointed chief engineer of the Commission.

J. G. MCMILLAN, formerly county surveyor of Santa Clara county, has opened offices with RALPH L. HUGHES and W. B. MCMILLAN in the Bank of San Jose building, San Jose, California.

R. A. HART, engineer in charge of the United States western drainage division, is inspecting lands in the Willamette valley, with a view to determining the practicability of reclamation work.

J. B. LIPPINCOTT, chief engineer of the Los Angeles aqueduct, and M. M. O'SHAUGHNESSY, city engineer of San Francisco, have been retained by the city of San Diego to report upon the value of the Volcan water system, which has been offered to the city.

At a recent meeting in Sacramento, at which the COUNTY SURVEYORS' ASSOCIATION OF CALIFORNIA was organized, LESLIE B. CROOK, of Sutter county, was elected president; E. N. EAGER, of Solano county, vice president; and DRURY BUTLER, of Sacramento county, secretary and treasurer.

Commercial Paragraphs

The PARROTT CO., San Francisco, has rented a Smith Hot Mixer to the city of Santa Rosa.

The city of Santa Rosa has purchased a sewer-cleaning machine from the A. L. YOUNG MACHINERY CO., 28 Fremont street, San Francisco.

The PACIFIC TANK & PIPE CO. announces the removal of its Portland offices to the ground floor of the Lewis building, Fourth and Oak streets.

The CONTRACTORS' MACHINERY EXCHANGE, INC., announces the opening of its yard at 38-48 Stanford street, between Brannan and Townsend, San Francisco. Besides selling and renting used contractor's machinery, it will operate a shop for repairs and overhauling.

The BYRON JACKSON MACHINE WORKS, 357 Market street, San Francisco, has sold a special pumping unit to the Yuma Electric & Water Co., consisting of two 1800-gal. pumps, working under a 125-ft. head, split type, direct connected, on the same base, to a 150-hp. General Electric motor.

Catalogues Received

The FAIRBANKS STEAM SHOVEL CO., Marion, Ohio. Catalogue of dipper dredges; 106 pages, illustrated.

RANSOME CONCRETE MACHINERY CO., Dunellen, N. J. Illustrated catalogue on general rules for the selection of equipment.

SWEDISH METAL PRESERVER CO., M. W. Putnam, Pacific building, San Francisco, agent. Catalogue of Swedish metal preserver.

WESTERN EQUIPMENT CO., 72 Fremont St., San Francisco. Catalogue of logger's, mine, mill, and contractor's, machinery; 176 pages, illustrated.

The HUBER MFG. CO., Marion, Ohio. Catalogue describing and illustrating steam road rollers, hauling engines, road sprinklers, scarifiers, and dump wagons.

AMERICAN BLOWER CO., Toledo, Ohio. Bulletin No. 27, Series 1. Sirocco System of Heating and Ventilation in Toledo's Crystal Palace for Manufacturing Enterprises.

'Fabroil Gears.' The GENERAL ELECTRIC COMPANY, Schenectady, New York. Contains a description of this kind of gearing together with a number of photographs of different machines using it.

'The Obrien-Hawley Down-Draft System of Smokeless Combustion.' The JOHN O'BRIEN BOILER WORKS CO., St. Louis, Missouri. Describes the down-draft furnace manufactured by the Company, including some tables of performance and a number of testimonials.

'The Pelton System of Power.' Bulletin No. 8. The PELTON WATER WHEEL CO., San Francisco. This booklet describes the Pelton water-wheel and treats of its great adaptability to the driving of every type of machinery. The expense of operation, after a wheel has been installed and suitably housed, is nominal, while power is available at all times when the stream flow is sufficient. A great deal of hitherto unpublished hydraulic information is included in the bulletin.

'Railway Line Material for Direct Suspension.' Bulletin 44004. The GENERAL ELECTRIC COMPANY, Schenectady, New York. Covers practically everything in line material for this method of suspension, except poles and wire, together with illustrations and catalogue numbers. The bulletin also contains miscellaneous data relative to construction, overhead material per mile, general data on the use of solid copper wire and copper cable, dimensions of grooved trolley wire sections, etc.

Generated on 2024-09-30 00:47 GMT / https://hdl.handle.net/2027/uiug.30112007838169
Public Domain, Google-digitized / http://www.hathitrust.org/access_use#pd-google
Digitized by Google
Original from UNIVERSITY OF ILLINOIS AT URBANA-CHAMPAIGN